excelsys

xgen series catalogue

The Modular Power Solution of Choice for Mission Critical Applications

- ***Highest Efficiency***
- ***Highest Reliability***
- ***Highest Power Density***

Xgen Product Selector

The Xgen series of user configurable power supplies with its unique plug and play architecture allows system designers to define and build 'instant' custom power solutions with industry leading 17W/in^3 power density and up to 90% efficiency.

Xgen *powerPacs*

The application specific 4 slot and 6 slot *powerPacs* provide up to 12 isolated DC outputs from 200W up to 1340W. The table below summarises the *powerPacs* by application and power level. Please refer to the specific product datasheets for full specifications.

Application	Slots	200W	400W	600W	700W	750W	800W	900W	1000W	1200W	1340W
Standard	4 Slot	XLA	XLB	XLC		XLD					
	6 Slot		XCA		XCB				XCC	XCD	XCE
Medical	4 Slot	XMA	XMB	XMC		XMD					
	6 Slot		XVA		XVB				XVC	XVD	XVE
Low Noise Standard	4 Slot	XKA	XKB	XKC							
	6 Slot		XQA					XQB		XQC	
Low Noise Medical	4 Slot	XRA	XRB	XRC							
	6 Slot		XZA					XZB		XZC	
Ultra Quiet Standard	4 Slot	XTA	XTB								
	6 Slot		XBA	XBB			XBC				
Ultra Quiet Medical	4 Slot	XNA	XNB								
	6 Slot		XWA	XWB			XWC				
Hi-Temp	6 Slot		XHA	XHB							

Xgen *powerMods*

High Efficiency Plug and Play DC output modules to provide a wide range of DC output voltages from 1.0V up to 58.0V.

MODEL	Vmin		Vnom	Vmax	Imax	Watts
	Vtrim	Vpot				
Xg1	1.0	1.5	2.5	3.6	50A	125W
Xg2	1.5	3.2	5.0	6.0	40A	200W
Xg3	4.0	6.0	12.0	15.0	20A	240W
Xg4	8.0	12.0	24.0	30.0	10A	240W
Xg5	8.0	28	48.0	58.0	6A	288W
Xg7		5.0	24.0	28.0	5A	120W
Xg8 V1		5.0	24.0	28.0	3A	72W
V2		5.0	24.0	28.0	3A	72W

Standard Xgen product options include: Conformal Coating, Low Acoustic Noise, Low Leakage Current, Extra Ruggedisation, Connector, Cabling & Mounting options, Thermal Signals and Reverse Fans. See Section 4.10 for more information.

CONTENTS

Section 1 Introduction

Section 1.1 .....About Excelsys 04
Section 1.2 .....Xgen Overview 05

Section 2 Product Datasheets

4 Slot

200W-750W .....Standard .....XL 06
200W-750W .....Medical .....XM 08
200W-600W .....Low Noise Standard .....XK 10
200W-600W .....Low Noise Medical .....XR 12
200W-400W .....Ultra Quiet Standard.....XT 14
200W-400W .....Ultra Quiet Medical.....XN 16

6 Slot

400W-1340W .....Standard .....XC 18
400W-1340W .....Medical .....XV 20
400W-1200W .....Low Noise Standard .....XQ 22
400W-1200W .....Low Noise Medical .....XZ 24
400W-800W .....Ultra Quiet Standard.....XB 26
400W-800W .....Ultra Quiet Medical.....XW 28
400W-600W .....Hi-Temp .....XH 30

Section 3 Getting started with your Xgen

Section 3.1 .....Configuring your Xgen 32
Section 3.2 .....Additional Xgen Flexibility and Signals 32
Section 3.3 .....Connectors 33
Section 3.4 .....Mechanical Drawings 34
Section 3.5 .....Configuration Examples 38

Section 4 Xgen Designer Manual

Section 4.1 .....Overview of the Xgen Series 40
Section 4.2 .....Installation Considerations 40
Section 4.3 .....Xgen Mounting Considerations 40
Section 4.4 .....Theory of Operation 41
Section 4.5 .....Xgen Configuration 41
Section 4.6 .....*PowerMod* Operation 42
Section 4.7 .....*PowerMod* Signals 47
Section 4.8 .....*PowerPac* Operation 47
Section 4.9 .....*PowerPac* (Global) Signals 48
Section 4.10 .....*PowerPac* Options 49
Section 4.11 .....Power Ratings 49
Section 4.12 .....Reliability 51
Section 4.13 .....Safety 52
Section 4.14 .....EMC 53

Section 5 Technical Resources

Section 5.1 .....Consult an Engineer and Online Resources 54
Section 5.2 .....Xgen Configurator and Product Selector 55

Section 1.1
About Excelsys

Your Global Partner for Mission Critical Modular Power Supplies

Excelsys Technologies brings over 20 years experience of modular power supply development and applications support in our revolutionary Xgen series of products. We serve original equipment manufacturers globally from our head office in Ireland, our additional sales offices in USA and China and our network of qualified and experienced distributors in over 30 countries worldwide. Together we have established Excelsys as the brand of choice for customers seeking the highest performing, most reliable and most cost efficient modular power solutions available in the market.

Serving Your Markets, Delivering Your Solutions...

Whatever your application, our dedicated teams of Sales and Applications Engineers are ready to assist you in defining and implementing the optimum modular power solution to meet your custom requirements. Some of the industries where Excelsys have demonstrated success include:

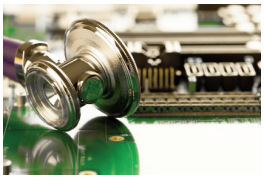

MEDICAL

Medical power supply design and manufacturing demands the highest safety and quality standards. The medically certified solutions in the Xgen Platform are the solutions of choice for variety of applications including:

Clinical Diagnostic Equipment • Medical Lasers • X-ray Machines • CT-Scanners • MRI Scanners Dialysis Equipment • Skin Treatment and Regeneration • Cryotherapy Equipment • Cancer Treatment Equipment

INDUSTRIAL

Excelsys Technologies designs and manufactures power supplies that meet the rigorous demands of the industrial sector. Our products are ideal for a variety of industrial, automation and test & measurement applications including:

Industrial Lasers • Optical Inspection Equipment • Electronic Microscopes • Printer & Paper Binder Equipment • Wafer Fabrication • High-End Camera Equipment • Industrial Cutting Equipment

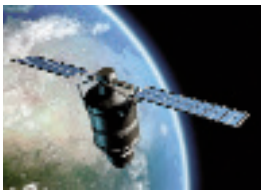

COMMUNICATIONS

The Xgen range of modular power supplies meet the high reliability and stringent space requirements (1U) of the communications electronics sector and are used across a wide number of applications including:

Wireless Telephony Equipment • Bulk Power System • Base Stations • Data Communications

HI-REL COTS

Excelsys designs and manufactures COTS (Commercial Off The Shelf) power supplies that meet the high reliability and often harsh operating environments of the military electronics industry and are ideal for use in a variety of applications including:

Radar Systems • Data Acquisition (Ground Based and Mobile) • Communications Equipment Test & Measurement Equipment

Excelsys: Our commitment to you...

As a global supplier of modular power supplies, Excelsys combines the latest technology, management methods and a total customer service philosophy to provide the best performing and highest reliability solutions for your business.

Working closely with both our customers and channel partners we are committed to ensuring our products provide the lowest total cost of power supply ownership over the life of your system.

Section 1.2
Overview

The Xgen series brings OEM power supplies to a new paradigm, combining technical excellence with logistics simplicity to provide the world's most flexible, high efficiency, high reliability modular power supply. Xgen continues the Excelsys tradition of providing an instant, no compromise power solution for any application where a unique set of voltage and current requirements is needed.

The Xgen power supply is the most flexible modular power supply in the world. This power supply family ranges in power from 200W to 1340W and is used throughout various industries including Medical, Industrial, Communications and Military.

Need a custom power supply in a hurry?

CUSTOM POWER

Xgen is a true Plug & Play multiple-output power supply. Any one of more than 30 million configurations can be assembled anywhere, in under 5 minutes, from standard, volume-produced modules. This is the new-paradigm: a custom power supply available in 5 minutes from standard parts.

Too much heat generated in your equipment?

Difficult to maintain your equipment at the right temperature?

EFFICIENCY

Xgen has industry unrivalled efficiency, exceeding 90%. This means that less than half of the amount of waste heat is created in comparison to conventional multiple output power sources with efficiencies of 80% and lower. It also guarantees increased system reliability.

Not enough space available in your equipment?

Is space at a premium, making design and manufacture difficult and compromised?

SPACE

Xgen has industry unrivalled power density for a full functionality AC/DC power supply, at 17W/in^3. You can get 1340W of multiple-output power source in 1U rack space. Its high power density minimises weight and maximises available space in your design for other components and general accessibility.

Looking for a cost-effective long term solution for all your power supply requirements?

COST-EFFECTIVE

Xgen is configured from standard subassemblies that are manufactured in volume in our world class manufacturing facility. This allows Excelsys to provide you with all the benefits of Xgen at a world class competitive price. Contact Excelsys or one of our distributors for details.

Worried about meeting all relevant standards - EMC, Safety, etc?

STANDARD APPROVALS

Xgen series models are fully compliant with all relevant standards. Standard parts meets the requirements EN60950, UL60950, CSA22.2, EN61000-3-x and EN61000-4-x. Additionally our medically approved range meet the requirements of EN60601 and UL60601 3rd edition for medical applications.

200W-750W

XL

Slimline Power Supply

User Configurable 1U Size

Xgen Series

PLUG & PLAY POWER
next generation power solution

FEATURES & OPTIONS

- Ultra high efficiency, up to 89%
- Extra low profile: 1U height (40mm)
- Plug & Play Power - allows fast custom configuration
- Individual output control signals
- All outputs fully floating
- Series / Parallel of multiple outputs
- Few electrolytic capacitors (all long life)
- Visual LED indicators
- 5V bias standby voltage provided
- SEMI F47 Compliant
- Standard Xgen product options include: Conformal Coating, Low Acoustic Noise, Low Leakage Current, Extra Ruggedisation, Connector, Cabling & Mounting options, Thermal Signals and Reverse Fans. See Section 4.10 for more information

APPLICATIONS INCLUDE

- Industrial machines
- Test and measurement
- Automation equipment
- Printing
- Telecommunications

The XL family of power supplies provides up to 750W in a slimline 1U package. Providing up to 8 isolated outputs, the XL family is the most flexible power supply in its class and brings affordable configurable power to the 200-750W market.

The slimline product boasts unrivalled power density saving valuable system space. Combined with ultra high efficiencies, the XL family provides system designers with flexible instant solutions that significantly shorten design-in time and simplify integration.

The XL family consists of 4 *powerPac* models in 200W, 400W, 600W and 750W power levels. Each *powerPac* model may be populated with up to 4 *powerMods* selected from the table of *powerMods* shown below.

All configurations carry full safety agency approvals, UL60950, EN60950 and are CE marked.

powerMods

MODEL	Vmin Vtrim	Vmin Vpot	Vnom	Vmax	Imax	Watts
Xg1	1.0	1.5	2.5	3.6	50A	125W
Xg2	1.5	3.2	5.0	6.0	40A	200W
Xg3	4.0	6.0	12.0	15.0	20A	240W
Xg4	8.0	12.0	24.0	30.0	10A	240W
Xg5	8.0	28	48.0	58.0	6A	288W
Xg7		5.0	24.0	28.0	5A	120W
Xg8 V1		5.0	24.0	28.0	3A	72W
V2		5.0	24.0	28.0	3A	72W

powerPacs

	MODEL	Watts
XL	XLA	200W
	XLB	400W
	XLC	600W
	XLD	750W

MECHANICAL SPECIFICATIONS

Note: See diagrams on pages 34-37

XLA, XLB, XLC

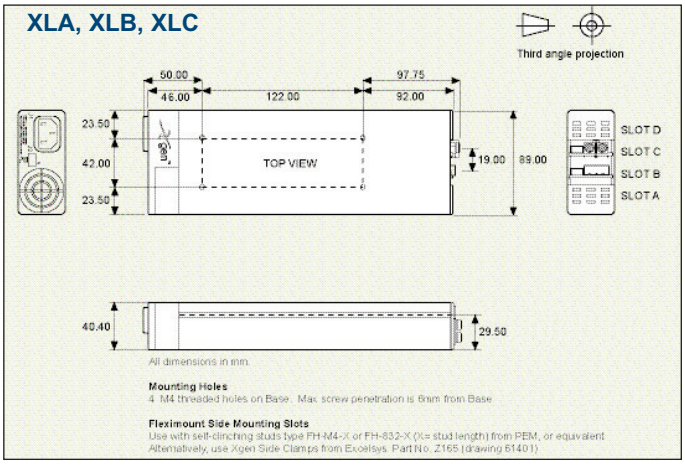

XLD

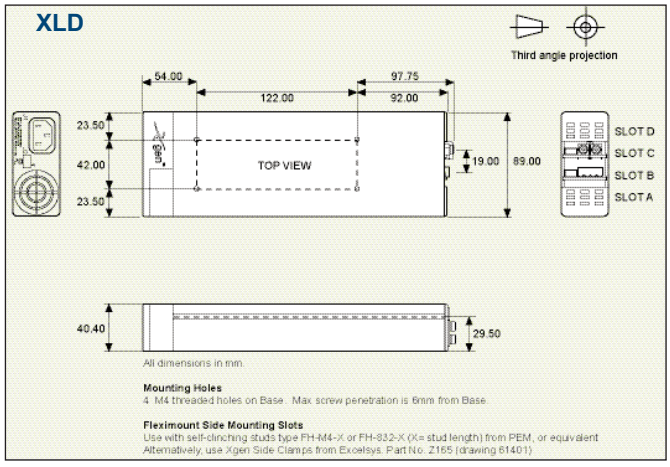

excelsys

SPECIFICATION applies to configured units consisting of ***powerMods*** inserted into the appropriate ***powerPac***

Input Voltage Range	Universal Input 47-440Hz	85 120		264 380	VAC VDC
Power Rating	XLA:200W, XLB:400W, XLC:600W, XLD:750W See Section 4.11 for line voltage deratings				
Input Current XLA XLB XLC XLD	85VAC in 200W out 85VAC in 400W out 85VAC in 400W out 85VAC in 525W out		4.0 6.0 7.5 7.5		A A A A
Inrush Current	230VAC, 25°C			50	A
Undervoltage Lockout	Shutdown	65		74	VAC
Fusing XLA XLB XLC, XLD	250V 5 x 20mm 250V 5 x 20mm 250V 5 x 20mm		F5A HRC F6.3A HRC F8A HRC		

OUTPUT

Parameter	Conditions/Description	Min	Nom	Max	Units
***powerMod* Power**	As per *powerMod* table				
Output Adjustment Range	Manual: Multi-turn potentiometer. As per *powerMod* table Electronic: See Section 4.6				
Minimum Load			0		A
Line Regulation	For ±10% change from nominal line			±0.1	%
Load Regulation	For 25% to 75% load change			±0.2	%
Cross Regulation				±0.2	%
Transient Response	For 25% to 75% load change Voltage Deviation Settling Time			10 250	% µs
Ripple and Noise	20MHz 100mV or 1.0% pk-pk				
Overvoltage Protection	1st level: Vset Tracking. 2nd level: Vmax (Latching)	110		125	%
Overcurrent Protection	Straight line with hiccup activation at <30% of Vnom See Section 4.6	110		120	%
Remote Sense	Max. line drop compensation. (except Xg7, Xg8)			0.5	VDC
Overshoot				2	%
Turn-on Delay	From AC In and Global Enable / powerMod Enable XLA, XLB, XLC From AC In and Global Enable / powerMod Enable XLD			700 / 6 1000 / 6	ms ms
Rise Time	Monotonic			5	ms
Hold-up Time	For nominal output voltages at full load XLA, XLB, XLC/XLD	20/15			ms
Output Isolation	Output to Output / Output to Chassis	500 / 500			VDC

GENERAL

Parameter	Conditions/Description	Min	Nom	Max	Units
Isolation Voltage	Input to Output Input to Chassis	3000 1500			VAC VAC
Efficiency	230VAC, 750W @ 24V		89		%
Safety Agency Approvals	EN60950, UL60950, CSA22.2 No.950 UL File No. E181875				
Leakage Current	250VAC, 60Hz, 25°C			1.5	mA
Signals	See Section 4.9				
Bias Supply	Always on. Current 250mA. 500mA option available	4.8	5.0	5.2	VDC
Reliability	Failures per million hours at 40°C and full load *powerMod* See Section 4.12. *powerPac* excludes fans *powerPac*			0.958 0.92	fpmh fpmh

EMC

Parameter	Standard		Level		Units
Emissions					
Conducted	EN55011, EN55022, FCC		Level B		
Radiated	EN55011, EN55022, FCC		Level B		
Harmonic Distortion	EN61000-3-2 Class A		Compliant		
Flicker & Fluctuation	EN61000-3-3		Compliant		
Immunity					
Electrostatic Discharge	EN61000-4-2		Level 2		
Radiated Immunity	EN61000-4-3		Level 3		
Fast Transients-Burst	EN61000-4-4 Level 3				
Input Line Surges	EN61000-4-5		Level 3		
Conducted Immunity	EN61000-4-6		Level 3		
Voltage Dips	EN61000-4-11, SEMI F47 compliant. See note 8.		Compliant		

ENVIRONMENTAL

Parameter	Conditions/Description	Min	Nom	Max	Units
Operating Temperature		-20		+70	°C
Storage Temperature		-40		+85	°C
Derating	See Section 4.11 for full temperature deratings				
Relative Humidity	Non-condensing	5		95	%RH
Shock	3000 Bumps, 10G (16ms) half sine				
Vibration	1.5G	10		200	Hz

NOTES

1. This product is not intended for use as a stand alone unit and must be installed by qualified personnel.
2. The specifications contained herein are believed to be correct at time of publication and are subject to change without notice.
3. All specifications at nominal input, full load, 25°C unless otherwise stated.
4. XLD: 800W peak for 1s; Duty cycle 7%. *powerMod* output power must not exceed normal ratings.
5. When powering inductive or capacitive loads, it is recommended to use a blocking diode on the output.
6. Conformal Coating option: See Sections 3.1 and 4.10 for details.
7. For section references above go to the Xgen Designers Manual.
8. SEMI F47 compliant at input voltages >160VAC. Consult Excelsys for details.

200W-750W

XM

Medical Power Supply

User Configurable 1U size

Xgen Series

PLUG & PLAY POWER
next generation power solution

FEATURES & OPTIONS

- EN60601-1 3rd edition approved
- Less than 300µA leakage current
- 150µA option available
- 4000VAC isolation
- Ultra high efficiency, up to 89%
- Extra low profile: 1U height (40mm)
- Plug & Play Power - allows fast custom configuration
- Individual output control signals
- All outputs fully floating
- Series / Parallel of multiple outputs
- Few electrolytic capacitors (all long life)
- 5V bias standby voltage provided
- Standard Xgen product options include: Conformal Coating, Low Acoustic Noise, Low Leakage Current, Extra Ruggedisation, Connector, Cabling & Mounting options, Thermal Signals and Reverse Fans. See Section 4.10 for more information

APPLICATIONS INCLUDE

- Radiological imaging
- Clinical diagnostics
- Medical lasers
- Clinical chemistry

The XM family of medically approved power supplies provides up to 750W in a slimline 1U package. The XM family carries the latest safety agency approvals to EN60601-1 and UL60601-1 3rd Edition, meeting the stringent creepage and clearance requirements in this compact package. Providing up to 8 isolated outputs, the XM family is the most flexible power supply in its class and brings affordable configurable power to the 200-750W medical market.

The XM family consists of 4 *powerPac* models in 200W, 400W, 600W and 750W power levels. Each *powerPac* model may be populated with up to 4 *powerMods* selected from the table of *powerMods* shown below. Simply select your appropriate *powerPac* and *powerMods* to get your instant custom power solution.

This slimline product boasts unrivalled power density, providing significant system space savings. Combined with ultra-high efficiencies, the XM family provides system designers with flexible instant solutions that significantly shorten system design-in time.

powerMods

MODEL	Vmin		Vnom	Vmax	Imax	Watts
	Vtrim	Vpot				
Xg1	1.0	1.5	2.5	3.6	50A	125W
Xg2	1.5	3.2	5.0	6.0	40A	200W
Xg3	4.0	6.0	12.0	15.0	20A	240W
Xg4	8.0	12.0	24.0	30.0	10A	240W
Xg5	8.0	28	48.0	58.0	6A	288W
Xg7			5.0	24.0	28.0	5A	120W
Xg8 V1			5.0	24.0	28.0	3A	72W
V2			5.0	24.0	28.0	3A	72W

powerPacs

	MODEL	Watts
XM	XMA	200W
	XMB	400W
	XMC	600W
	XMD	750W

MECHANICAL SPECIFICATIONS

Note: See diagrams on pages 34-37

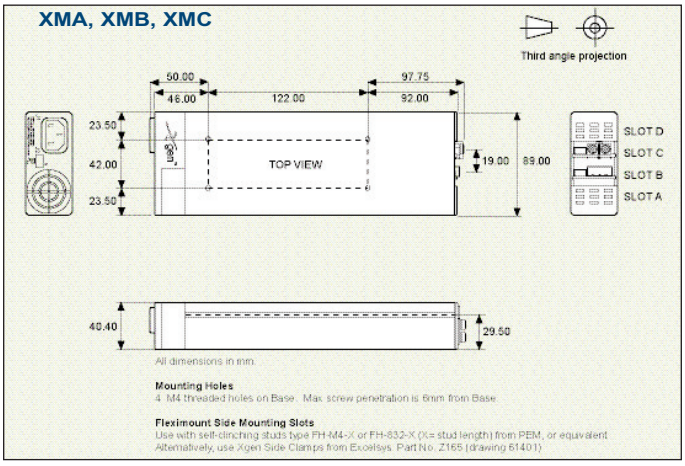

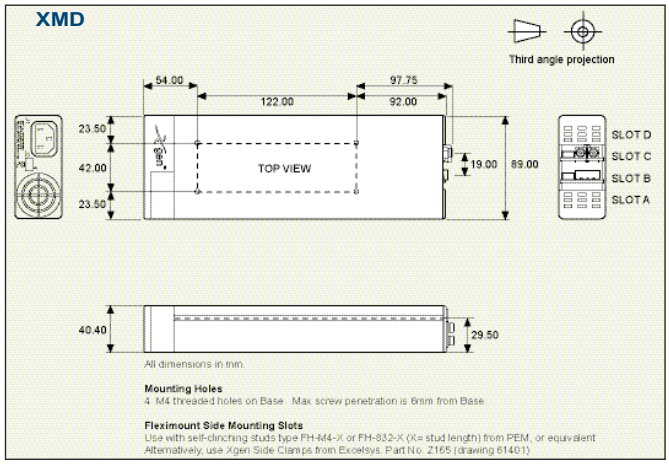

excelsys

SPECIFICATION applies to configured units consisting of ***powerMods*** plugged into the appropriate ***powerPac***

INPUT

Parameter	Conditions/Description	Min	Nom	Max	Units
Input Voltage Range	Universal Input 47-440Hz	85 120		264 380	VAC VDC
Power Rating	XMA:200W, XMB:400W, XMC:600W, XMD:750W See Section 4.11 for line voltage deratings				
Input Current XMA	85VAC in 200W out		4.0		A
XMB	85VAC in 400W out		6.0		A
XMC	85VAC in 400W out		7.5		A
XMD	85VAC in 525W out		7.5		A
Inrush Current	230VAC, 25°C			50	A
Undervoltage Lockout	Shutdown	65		74	VAC
Fusing XMA	250V 5 x 20mm		F5A HRC		
XMB	250V 5 x 20mm		F6.3A HRC		
XMC, XMD	250V 5 x 20mm		F8A HRC		

OUTPUT

Parameter	Conditions/Description	Min	Nom	Max	Units
***powerMod* Power**	As per *powerMod* table				
Output Adjustment Range	Manual: Multi-turn potentiometer. As per *powerMod* table Electronic: See Section 4.6				
Minimum Load			0		A
Line Regulation	For ±10% change from nominal line			±0.1	%
Load Regulation	For 25% to 75% load change			±0.2	%
Cross Regulation				±0.2	%
Transient Response	For 25% to 75% load change Voltage Deviation Settling Time			10 250	% µs
Ripple and Noise	20MHz 100mV or 1.0% pk-pk				
Overvoltage Protection	1st level: Vset Tracking. 2nd level: Vmax (Latching)	110		125	%
Overcurrent Protection	Straight line with hiccup activation at <30% of Vnom See Section 4.6	110		120	%
Remote Sense	Max. line drop compensation. (except Xg7, Xg8)			0.5	VDC
Overshoot				2	%
Turn-on Delay	From AC in and Global Enable / powerMod Enable XMA, XMB, XMC From AC in and Global Enable / powerMod Enable XMD			700 / 6 1000 / 6	ms ms
Rise Time	Monotonic			5	ms
Hold-up Time	For nominal output voltages at full load XMA,XMB, XMC/XMD	20/15			ms
Output Isolation	Output to Output / Output to Chassis	500 / 500			VDC

GENERAL

Parameter	Conditions/Description	Min	Nom	Max	Units
Isolation Voltage	Input to Output Input to Chassis	4000 1500			VAC VAC
Efficiency	230VAC, 750W @ 24V		89		%
Safety Agency Approvals	EN60601-1, UL60601-1 3rd Edition, CSA601-1 UL File no. E230761				
Leakage Current	250VAC, 60Hz, 25°C 250VAC, 60Hz, 25°C Option 04			300 150	µA µA
Signals	See Section 4.9				
Bias Supply	Always on. Current 250mA. 500mA option available	4.8	5.0	5.2	VDC
Reliability	Failures per million hours at 40°C and full load *powerMod* See Section 4.12. *powerPac* excludes fans *powerPac*			0.958 0.92	fpmh fpmh

Parameter	Standard		Level		Units
Emissions					
Conducted	EN55011, EN55022, FCC		Level B		
Radiated	EN55011, EN55022, FCC		Level B		
Harmonic Distortion	EN61000-3-2 Class A		Compliant		
Flicker & Fluctuation	EN61000-3-3		Compliant		
Immunity					
Electrostatic Discharge	EN61000-4-2		Level 2		
Radiated Immunity	EN61000-4-3		Level 3		
Fast Transients-Burst	EN61000-4-4		Level 3		
Input Line Surges	EN61000-4-5		Level 3		
Conducted Immunity	EN61000-4-6		Level 3		
Voltage Dips	EN61000-4-11		Compliant		

Parameter	Conditions/Description	Min	Nom	Max	Units
Operating Temperature		-20		+70	°C
Storage Temperature		-40		+85	°C
Derating	See Section 4.11 for full temperature deratings				
Relative Humidity	Non-condensing	5		95	%RH
Shock	3000 Bumps, 10G (16ms) half sine				
Vibration	1.5G	10		200	Hz

NOTES

1. This product is not intended for use as a stand alone unit and must be installed by qualified personnel.
2. The specifications contained herein are believed to be correct at time of publication and are subject to change without notice.
3. All specifications at nominal input, full load, 25°C unless otherwise stated.
4. XMD: 800W peak for 1s; Duty cycle 7%. *powerMod* output power must not exceed normal ratings.
5. When powering inductive or capacitive loads, it is recommended to use a blocking diode on the output.
6. For section references above go to the Xgen Designers Manual.

XK

Slimline Power Supply

User Configurable 1U size

Xgen Series

PLUG & PLAY POWER
next generation power solution

FEATURES & OPTIONS

- Low Acoustic noise 39.8dBA
- Ultra high efficiency, up to 89%
- Extra low profile: 1U height (40mm)
- Plug & Play Power - allows fast custom configuration
- Individual output control signals
- All outputs fully floating
- Series / Parallel of multiple outputs
- Few electrolytic capacitors (all long life)
- Visual LED indicators
- 5V bias standby voltage provided
- SEMI F47 Compliant
- Standard Xgen product options include: Conformal Coating, Low Acoustic Noise, Low Leakage Current, Extra Ruggedisation, Connector, Cabling & Mounting options, Thermal Signals and Reverse Fans. See Section 4.10 for more information

APPLICATIONS INCLUDE

- Audio Equipment
- Test and measurement
- Telecommunications

The XK family of low acoustic noise power supplies provides up to 600W in a slimline 1U x 260mm x 89mm package. Providing up to 8 isolated outputs, the XK family is the most flexible power supply in its class and brings affordable configurable power to the 200-600W market.

Ideal for acoustic sensitive applications, the XK boasts unrivalled power density saving valuable system space. Combine with ultra high efficiencies, the XK family provides system designers with flexible instant solutions that significantly shorten and simplify system design-in time.

The XK family consists of 3 *powerPac* models in 200W, 400W and 600W power levels. Each *powerPac* model may be populated with up to 4 *powerMods* selected from the table of *powerMods* shown below.

All configurations carry full safety agency approvals, UL60950, EN60950 and are CE marked.

powerMods

MODEL	Vmin		Vnom	Vmax	Imax	Watts
	Vtrim	Vpot				
Xg1	1.0	1.5	2.5	3.6	50A	125W
Xg2	1.5	3.2	5.0	6.0	40A	200W
Xg3	4.0	6.0	12.0	15.0	20A	240W
Xg4	8.0	12.0	24.0	30.0	10A	240W
Xg5	8.0	28	48.0	58.0	6A	288W
Xg7		5.0	24.0	28.0	5A	120W
Xg8 V1		5.0	24.0	28.0	3A	72W
V2		5.0	24.0	28.0	3A	72W

powerPacs

	MODEL	Watts
XK	XKA	200W
	XKB	400W
	XKC	600W

EFFICIENCY (typical)

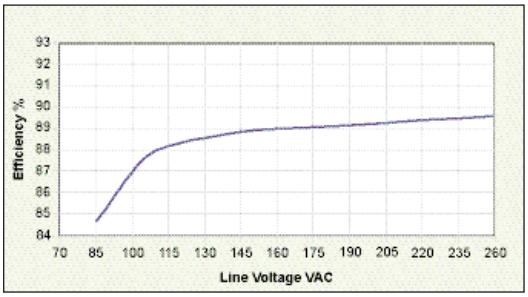

MECHANICAL SPECIFICATIONS

Note: See diagrams on pages 34-37

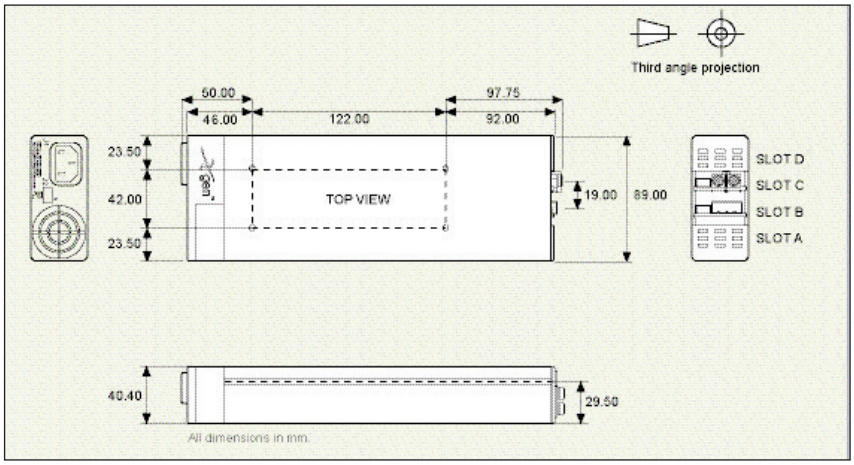

excelsys

SPECIFICATION applies to configured units consisting of ***powerMods*** plugged into the appropriate ***powerPac***

INPUT

Parameter	Conditions/Description	Min	Nom	Max	Units
Input Voltage Range	Universal Input 47-440Hz	85 120		264 380	VAC VDC
Power Rating	XKA:200W, XKB:400W, XKC:600W See Section 4.11 for line voltage deratings				
Input Current XKA XKB XKC	85VAC in 200W out 85VAC in 400W out 85VAC in 400W out		4.5 5.5 7.5		A A A
Inrush Current	230VAC, 25°C			50	A
Undervoltage Lockout	Shutdown	65		74	VAC
Fusing XKA XKB XKC	250V 5 x 20mm 250V 5 x 20mm 250V 5 x 20mm		F5A HRC F6.3A HRC F8A HRC		

OUTPUT

Parameter	Conditions/Description	Min	Nom	Max	Units
***powerMod* Power**	As per *powerMod* table				
Output Adjustment Range	Manual: Multi-turn potentiometer. As per *powerMod* table Electronic: See Section 4.6				
Minimum Load			0		A
Line Regulation	For ±10% change from nominal line			±0.1	%
Load Regulation	For 25% to 75% load change			±0.2	%
Cross Regulation				±0.2	%
Transient Response	For 25% to 75% load change Voltage Deviation Settling Time			10 250	% µs
Ripple and Noise	20MHz 100mV or 1.0% pk-pk				
Overvoltage Protection	Two-level. 1st level: Vset Tracking. 2nd level: Vmax (Latching)	110		125	%
Overcurrent Protection	Straight line with hiccup activation at <30% of Vnom See Section 4.6	110		120	%
Remote Sense	Max. line drop compensation. (except Xg7, Xg8)			0.5	VDC
Overshoot				2	%
Turn-on Delay	From AC in and Global Enable / powerMod Enable			700 / 6	ms
Rise Time	Monotonic			5	ms
Hold-up Time	For nominal output voltages at full load	20			ms
Output Isolation	Output to Output / Output to Chassis	500 / 500			VDC

GENERAL

Parameter	Conditions/Description	Min	Nom	Max	Units
Isolation Voltage	Input to Output Input to Chassis	3000 1500			VAC VAC
Efficiency	230VAC, 600W @ 24V		89		%
Safety Agency Approvals	EN60950, UL60950, CSA22.2 No.950 UL File No. E181875				
Leakage Current	250VAC, 60Hz, 25°C			1.5	mA
Signals	See Section 4.9				
Bias Supply	Always on. Current 250mA. 500mA option available	4.8	5.0	5.2	VDC
Reliability	Failures per million hours at 40°C and full load *powerMod* See Section 4.12. *powerPac* excludes fans *powerPac*			0.958 0.92	fpmh fpmh

EMC

Parameter	Standard		Level		Units
Emissions					
Conducted	EN55011, EN55022, FCC		Level B		
Radiated	EN55011, EN55022, FCC		Level B		
Harmonic Distortion	EN61000-3-2 Class A		Compliant		
Flicker & Fluctuation	EN61000-3-3		Compliant		
Immunity					
Electrostatic Discharge	EN61000-4-2		Level 2		
Radiated Immunity	EN61000-4-3		Level 3		
Fast Transients-Burst	EN61000-4-4		Level 3		
Input Line Surges	EN61000-4-5		Level 3		
Conducted Immunity	EN61000-4-6		Level 3		
Voltage Dips	EN61000-4-11, SEMI F47 compliant. See note 7.		Compliant		

ENVIRONMENTAL

Parameter	Conditions/Description	Min	Nom	Max	Units
Operating Temperature		-20		+70	°C
Storage Temperature		-40		+85	°C
Derating	See Section 4.11 for full temperature deratings				
Relative Humidity	Non-condensing	5		95	%RH
Acoustic Noise	Measured from distance of 1m		39.8		dBA
Shock	3000 Bumps, 10G (16ms) half sine				
Vibration	1.5G	10		200	Hz

NOTES

1. This product is not intended for use as a stand alone unit and must be installed by qualified personnel.
2. The specifications contained herein are believed to be correct at time of publication and are subject to change without notice.
3. All specifications at nominal input, full load, 25°C unless otherwise stated.
4. When powering inductive or capacitive loads, it is recommended to use a blocking diode on the output.
5. Conformal Coating option: See Sections 3.1 and 4.10 for details.
6. For section references above go to the Xgen Designers Manual.
7. SEMI F47 compliant at input voltages >160VAC. Consult Excelsys for details.

200W-600W

XR

Medical Power Supply

Low Acoustic Noise 1U size

Xgen Series

PLUG & PLAY POWER
next generation power solution

The XR family of low acoustic noise medically approved power supplies provides up to 600W in a slimline 1u x 260mm x 89mm package. Ideal for acoustic sensitive medical equipment, the XR family carries full safety agency approvals to EN60601-1 and UL60601-1 3rd Edition, meeting the stringent creepage and clearance requirements in this compact package. Providing up to 8 isolated outputs, the XR family is the most flexible power supply in its class and brings affordable configurable power to the 200-600W medical market.

The XR family consists of 3 *powerPac* models in 200W, 400W and 600W power levels. Each *powerPac* model may be populated with up to 4 *powerMods* selected from the table of *powerMods* shown below. Simply select your appropriate *powerPac* and *powerMods* to get your instant custom power solution.

This slimline product boasts unrivalled power density, providing significant system space savings. Combined with ultra-high efficiencies, the XR family provides system designers with flexible instant solutions that significantly shorten system design-in time.

FEATURES & OPTIONS

- Low Acoustic noise 39.8dBA
- EN60601-1 3rd edition approved
- Less than 300µA leakage current
- 150µA option available
- 4000VAC isolation
- Ultra high efficiency, up to 89%
- Extra low profile: 1U height (40mm)
- Plug & Play Power - allows fast custom configuration
- Individual output control signals
- All outputs fully floating
- Series / Parallel of multiple outputs
- Few electrolytic capacitors (all long life)
- 5V bias standby voltage provided
- Standard Xgen product options include: Conformal Coating, Low Acoustic Noise, Low Leakage Current, Extra Ruggedisation, Connector, Cabling & Mounting options, Thermal Signals and Reverse Fans. See Section 4.10 for more information

APPLICATIONS INCLUDE

- Radiological imaging
- Clinical diagnostics
- Medical lasers
- Clinical chemistry

powerMods

MODEL	Vmin Vtrim	Vmin Vpot	Vnom	Vmax	Imax	Watts
Xg1	1.0	1.5	2.5	3.6	50A	125W
Xg2	1.5	3.2	5.0	6.0	40A	200W
Xg3	4.0	6.0	12.0	15.0	20A	240W
Xg4	8.0	12.0	24.0	30.0	10A	240W
Xg5	8.0	28	48.0	58.0	6A	288W
Xg7			5.0	24.0	28.0	5A	120W
Xg8 V1			5.0	24.0	28.0	3A	72W
V2			5.0	24.0	28.0	3A	72W

powerPacs

	MODEL	Watts
XR	XRA	200W
	XRB	400W
	XRC	600W

EFFICIENCY (typical)

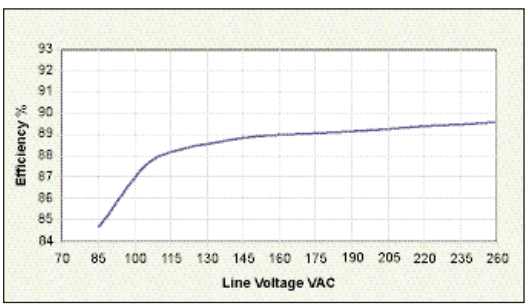

MECHANICAL SPECIFICATIONS

Note: See diagrams on pages 34-37

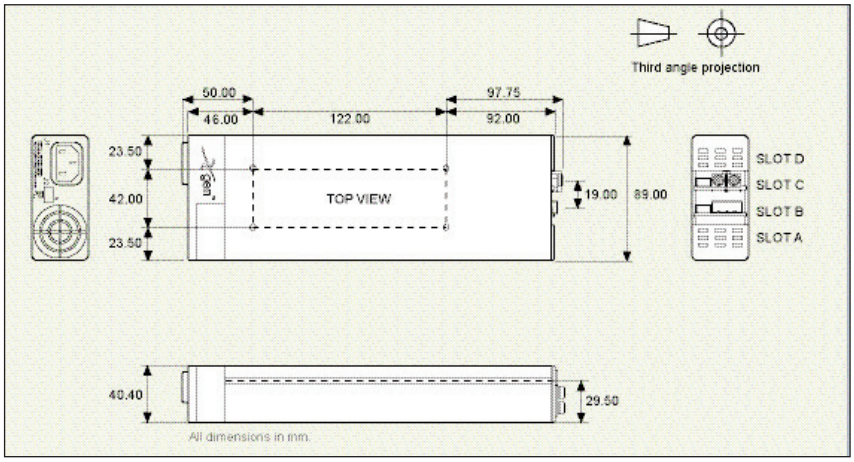

excelsys

SPECIFICATION applies to configured units consisting of ***powerMods*** plugged into the appropriate ***powerPac***

INPUT

Parameter	Conditions/Description	Min	Nom	Max	Units
Input Voltage Range	Universal Input 47-440Hz	85 120		264 380	VAC VDC
Power Rating	XRA:200W, XRB:400W, XRC:600W See Section 4.11 for line voltage deratings				
Input Current XRA XRB XRC	85VAC in 200W out 85VAC in 400W out 85VAC in 400W out		4.5 5.5 7.5		A A A
Inrush Current	230VAC, 25°C			50	A
Undervoltage Lockout	Shutdown	65		74	VAC
Fusing XRA XRB XRC	250V 5 x 20mm 250V 5 x 20mm 250V 5 x 20mm		F5A HRC F6.3A HRC F8A HRC		

OUTPUT

Parameter	Conditions/Description	Min	Nom	Max	Units
***powerMod* Power**	As per *powerMod* table				
Output Adjustment Range	Manual: Multi-turn potentiometer. As per *powerMod* table Electronic: See Section 4.6				
Minimum Load			0		A
Line Regulation	For ±10% change from nominal line			±0.1	%
Load Regulation	For 25% to 75% load change			±0.2	%
Cross Regulation				±0.2	%
Transient Response	For 25% to 75% load change Voltage Deviation Settling Time			10 250	% µs
Ripple and Noise	20MHz 100mV or 1.0% pk-pk				
Overvoltage Protection	1st level: Vset Tracking. 2nd level: Vmax (Latching)	110		125	%
Overcurrent Protection	Straight line with hiccup activation at <30% of Vnom See Section 4.6	110		120	%
Remote Sense	Max. line drop compensation. (except Xg7, Xg8)			0.5	VDC
Overshoot				2	%
Turn-on Delay	From AC in and Global Enable / powerMod Enable			700 / 6	ms
Rise Time	Monotonic			5	ms
Hold-up Time	For nominal output voltages at full load	20			ms
Output Isolation	Output to Output / Output to Chassis	500 / 500			VDC

GENERAL

Parameter	Conditions/Description	Min	Nom	Max	Units
Isolation Voltage	Input to Output Input to Chassis	4000 1500			VAC VAC
Efficiency	230VAC, 600W @ 24V		89		%
Safety Agency Approvals	EN60601-1, UL2601-1, CSA601-1 UL File No. E230761				
Leakage Current	250VAC, 60Hz, 25°C 250VAC, 60Hz, 25°C Option 04			300 150	µA µA
Signals	See Section 4.9				
Bias Supply	Always on. Current 250mA. 500mA option available	4.8	5.0	5.2	VDC
Reliability	Failures per million hours at 40°C and full load *powerMod* See Section 4.12. *powerPac* excludes fans *powerPac*			0.958 0.92	fpmh fpmh

EMC

Parameter	Standard		Level		Units
Emissions					
Conducted	EN55011, EN55022, FCC		Level B		
Radiated	EN55011, EN55022, FCC		Level B		
Harmonic Distortion	EN61000-3-2 Class A		Compliant		
Flicker & Fluctuation	EN61000-3-3		Compliant		
Immunity					
Electrostatic Discharge	EN61000-4-2		Level 2		
Radiated Immunity	EN61000-4-3		Level 3		
Fast Transients-Burst	EN61000-4-4		Level 3		
Input Line Surges	EN61000-4-5		Level 3		
Conducted Immunity	EN61000-4-6		Level 3		
Voltage Dips	EN61000-4-11		Compliant		

ENVIRONMENTAL

Parameter	Conditions/Description	Min	Nom	Max	Units
Operating Temperature		-20		+70	°C
Storage Temperature		-40		+85	°C
Derating	See Section 4.11 for full temperature deratings				
Relative Humidity	Non-condensing	5		95	%RH
Acoustic Noise	Measured from distance of 1m		39.8		dBA
Shock	3000 Bumps, 10G (16ms) half sine				
Vibration	1.5G	10		200	Hz

NOTES

1. This product is not intended for use as a stand alone unit and must be installed by qualified personnel.
2. The specifications contained herein are believed to be correct at time of publication and are subject to change without notice.
3. All specifications at nominal input, full load, 25°C unless otherwise stated.
4. When powering inductive or capacitive loads, it is recommended to use a blocking diode on the output.
5. For section references above go to the Xgen Designers Manual.

200W-400W

XT

Ultra Low Noise Power Supply

Ultra-high efficiency 1U size

Xgen Series

PLUG & PLAY POWER
next generation power solution

FEATURES & OPTIONS

- Low Acoustic noise 37.3dBA
- Ultra high efficiency, up to 89%
- Extra low profile: 1U height (40mm)
- Plug & Play Power - allows fast custom configuration
- Individual output control signals
- All outputs fully floating
- Series / Parallel of multiple outputs
- Few electrolytic capacitors (all long life)
- Visual LED indicators
- 5V bias standby voltage provided
- Standard Xgen product options include: Conformal Coating, Low Acoustic Noise, Low Leakage Current, Extra Ruggedisation, Connector, Cabling & Mounting options, Thermal Signals and Reverse Fans. See Section 4.10 for more information

APPLICATIONS INCLUDE

- Audio Equipment
- Test and measurement
- Telecommunications

- For Medical applications, See XN

The XT family of Ultra Low Noise power supplies provides up to 400W in an extremely compact 1U x 260mm x 89mm package. With efficiencies of up to 90%, the XT family employs an innovative plug & play architecture that allows users to instantly configure a custom power solution in less than 5 minutes!

Ideal for acoustic sensitive applications such as audio applications, the XT family provides unmatched efficiency and high power density, made possible through the combination of low loss technologies and the best field-proven technologies in planar magnetics and surface mount electronics.

The XT family consists of 2 *powerPac* models ranging in power levels from 200W to 400W. Each model may be populated with up to 4 *powerMods* selected from the table of *powerMods* shown below.

All configurations carry full safety agency approvals, UL60950, EN60950 and are CE marked.

powerMods

MODEL	Vmin Vtrim	Vmin Vpot	Vnom	Vmax	Imax	Watts
Xg1	1.0	1.5	2.5	3.6	41.6A	104W
Xg2	1.5	3.2	5.0	6.0	33.2A	166W
Xg3	4.0	6.0	12.0	15.0	16.67A	200W
Xg4	8.0	12.0	24.0	30.0	8.33A	200W
Xg5	8.0	28	48.0	58.0	5A	240W
Xg7		5.0	24.0	28.0	4.17A	100W
Xg8 V1		5.0	24.0	28.0	2.5A	60W
V2		5.0	24.0	28.0	2.5A	60W

powerPacs

	MODEL	Watts
XT	XTA	200W
	XTB	400W

powerMod Maximum Power Outputs (W) have been derated to operate with XT range of Ultra Low-Noise Power Supplies. See Section 4.11 Xgen Designers Manual for full derating details.

MECHANICAL SPECIFICATIONS

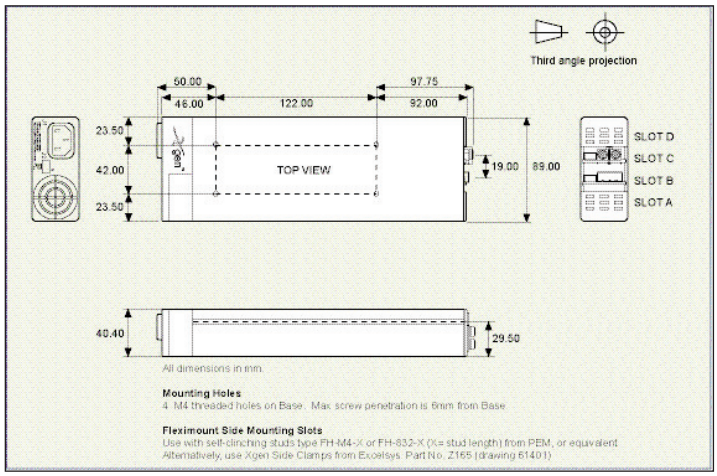

EFFICIENCY (typical)

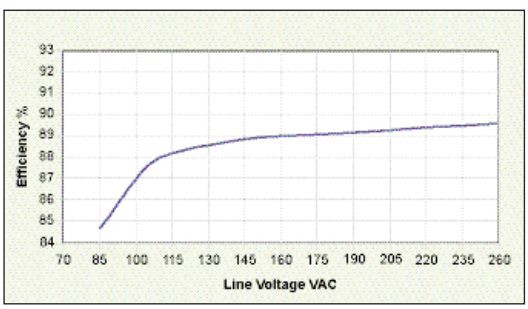

excelsys

SPECIFICATION applies to configured units consisting of ***powerMods*** plugged into the appropriate ***powerPac***

INPUT

Parameter	Conditions/Description	Min	Nom	Max	Units
Input Voltage Range	Universal Input 47-440Hz	85 120		264 380	VAC VDC
Power Rating	XTA:200W, XTB:400W See Section 4.11 for line voltage deratings				
Input Current XTA XTB	85VAC in 200W out 85VAC in 283W out		4.5 5.0		A A
Inrush Current	230VAC, 25°C			50	A
Undervoltage Lockout	Shutdown	65		74	VAC
Fusing XTA XTB	250V 250V		F5A HRC F6.3A HRC		

OUTPUT

Parameter	Conditions/Description	Min	Nom	Max	Units
***powerMod* Power**	As per *powerMod* table				
Output Adjustment Range	Manual: Multi-turn potentiometer. As per *powerMod* table Electronic: See Section 4.6				
Minimum Load			0		A
Line Regulation	For ±10% change from nominal line			±0.1	%
Load & Cross Regulation	For 25% to 75% load change			±0.2	%
Transient Response	For 25% to 75% load change Voltage Deviation Settling Time			10 250	% µs
Ripple and Noise	20MHz 100mV or 1.0% pk-pk				
Overvoltage Protection	1st level: Vset Tracking. 2nd level: Vmax (Latching)	110		125	%
Overcurrent Protection	Straight line with hiccup activation at <30% of Vnom See Section 4.6	110		120	%
Remote Sense	Max. line drop compensation. (except Xg7, Xg8)			0.5	VDC
Overshoot				2	%
Turn-on Delay	From AC in and Global Enable / powerMod Enable			700 / 6	ms
Rise Time	Monotonic			5	ms
Hold-up Time	For nominal output voltages at full load. XTA & XTB	20 / 15			ms
Output Isolation	Output to Output / Output to Chassis	500 / 500			VDC

GENERAL

Parameter	Conditions/Description	Min	Nom	Max	Units
Isolation Voltage	Input to Output Input to Chassis	3000 1500			VAC VAC
Efficiency	230VAC, 400W @ 24V		90		%
Safety Agency Approvals	EN60950, UL60950, CSA22.2 No.950 UL File No. E181875				
Leakage Current	250VAC, 60Hz, 25°C			1.5	mA
Signals	See Section 4.9				
Bias Supply	Always on. Current 250mA. 500mA option available	4.8	5.0	5.2	VDC
Reliability	Failures per million hours at 40°C and full load *powerMod* See Section 4.12. *powerPac* excludes fans *powerPac*			0.958 0.92	fpmh fpmh

EMC

Parameter	Standard		Level		Units
Emissions					
Conducted	EN55011, EN55022, FCC		Level B		
Radiated	EN55011, EN55022, FCC		Level B		
Harmonic Distortion	EN61000-3-2 Class A		Compliant		
Flicker & Fluctuation	EN61000-3-3		Compliant		
Immunity					
Electrostatic Discharge	EN61000-4-2		Level 2		
Radiated Immunity	EN61000-4-3		Level 3		
Fast Transients-Burst	EN61000-4-4		Level 3		
Input Line Surges	EN61000-4-5		Level 3		
Conducted Immunity	EN61000-4-6		Level 3		
Voltage Dips	EN61000-4-11		Compliant		

ENVIRONMENTAL

Parameter	Conditions/Description	Min	Nom	Max	Units
Operating Temperature		-20		+70	°C
Storage Temperature		-40		+85	°C
Derating	See Section 4.11 for full temperature deratings				
Relative Humidity	Non-condensing	5		95	%RH
Acoustic Noise	Measured from distance on 1m		37.3		dBA
Shock	3000 Bumps, 10G (16ms) half sine				
Vibration	1.5G	10		200	Hz

NOTES

1. This product is not intended for use as a stand alone unit and must be installed by qualified personnel.
2. The specifications contained herein are believed to be correct at time of publication and are subject to change without notice.
3. All specifications at nominal input, full load, 25°C unless otherwise stated.
4. When powering inductive or capacitive loads, it is recommended to use a blocking diode on the output.
5. Conformal Coating option: See Sections 3.1 and 4.10 for details.
6. For section references above go to the Xgen Designers Manual.

200W-400W

XN

Medically Approved
Ultra Low Noise Power Supply

Ultra-high efficiency 1U size

Xgen Series

PLUG & PLAY POWER
next generation power solution

FEATURES & OPTIONS

- Low Acoustic noise 37.3dBA
- EN60601-1 3rd edition approved
- Less than 300µA leakage current
- 150µA option available
- 4000VAC isolation
- Ultra high efficiency, up to 89%
- Extra low profile: 1U height (40mm)
- Plug & Play Power - allows fast custom configuration
- Individual output control signals
- All outputs fully floating
- Series / Parallel of multiple outputs
- Few electrolytic capacitors (all long life)
- 5V bias standby voltage provided
- Standard Xgen product options include: Conformal Coating, Low Acoustic Noise, Low Leakage Current, Extra Ruggedisation, Connector, Cabling & Mounting options, Thermal Signals and Reverse Fans. See Section 4.10 for more information

APPLICATIONS INCLUDE

- Clinical diagnostic equipment
- Medical lasers
- Dialysis equipment

- For Standard applications see XT

The XN family of medically approved Ultra Low Noise power supplies provides up to 400W in an extremely compact 1U package. Providing up to 8 isolated DC outputs, the XN family employs innovative plug & play architecture allowing users to instantly configure a custom power solution in less than 5 minutes!

The XN family consists of 3 *powerPacs* ranging in power levels from 200W to 400W peak and 7 *powerMod* DC output modules. Simply select the appropriate *powerPac* and up to 4 *powerMod*s from the tables below to complete your custom power supply.

The XN family boasts ultra-high efficiencies (up to 90%). The significant system space savings and reduced heat dissipation radically simplify system design.

All configurations carry full safety agency approvals including UL60601-1, EN60601-1 3rd Edition and are CE marked.

powerMods

MODEL	Vmin		Vnom	Vmax	Imax	Watts
	Vtrim	Vpot				
Xg1	1.0	1.5	2.5	3.6	41.6A	104W
Xg2	1.5	3.2	5.0	6.0	33.2A	166W
Xg3	4.0	6.0	12.0	15.0	16.67A	200W
Xg4	8.0	12.0	24.0	30.0	8.33A	200W
Xg5	8.0	28	48.0	58.0	5A	240W
Xg7		5.0	24.0	28.0	4.17A	100W
Xg8 V1		5.0	24.0	28.0	2.5A	60W
V2		5.0	24.0	28.0	2.5A	60W

powerPacs

	MODEL	Watts
XN	XNA	200W
	XNB	400W

powerMod Maximum Power Outputs (W) have been derated to operate with XN range of Ultra Low-Noise Power Supplies. See Section 4.11 Xgen Designers' Manual for full derating details.

EFFICIENCY (typical)

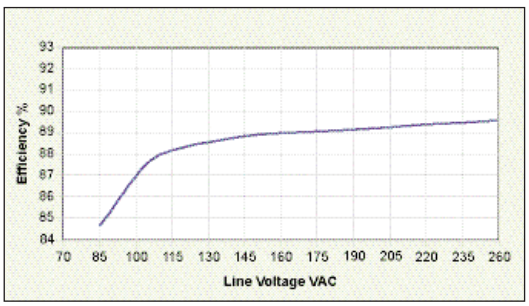

MECHANICAL SPECIFICATIONS

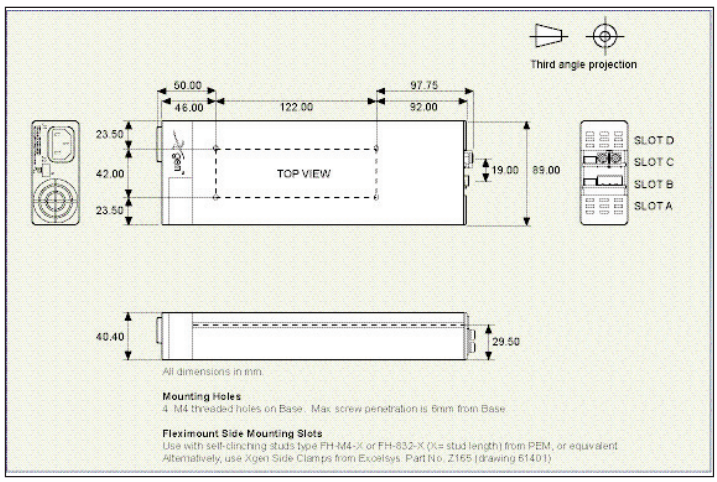

excelsys

SPECIFICATION applies to configured units consisting of ***powerMods*** plugged into the appropriate ***powerPac***

INPUT

Parameter	Conditions/Decription	Min	Nom	Max	Units
Input Voltage Range	Universal Input 47-440Hz	85 120		264 380	VAC VDC
Power Rating	XNA:200W, XNB:400W See Section 4.11 for line voltage deratings				
Input Current XNA XNB	85VAC in 200W out 85VAC in 283W out		4.5 5.0		A A
Inrush Current	230VAC, 25°C			50	A
Undervoltage Lockout	Shutdown	65		74	VAC
Fusing XNA XNB	250V 250V		F5A HRC F6.3A HRC		

OUTPUT

Parameter	Conditions/Description	Min	Nom	Max	Units
***powerMod* Power**	As per *powerMod* table				
Output Adjustment Range	Manual: Multi-turn potentiometer. As per *powerMod* table Electronic: See Section 4.6				
Minimum Load			0		A
Line Regulation	For ±10% change from nominal line			±0.1	%
Load & Cross Regulation	For 25% to 75% load change			±0.2	%
Transient Response	For 25% to 75% load change Voltage Deviation Settling Time			10 250	% µs
Ripple and Noise	220MHz 100mV or 1.0% pk-pk				
Overvoltage Protection	Two-level. 1st level: Vset Tracking. 2nd level: Vmax (Latching)	110		125	%
Overcurrent Protection	Straight line with hiccup activation at <30% of Vnom See Section 4.6	110		120	%
Remote Sense	Max. line drop compensation. (except Xg7, Xg8)			0.5	VDC
Overshoot				2	%
Turn-on Delay	From AC in and Global Enable / powerMod Enable			700 / 6	ms
Rise Time	Monotonic			5	ms
Hold-up Time	For nominal output voltages at full load. XNA & XNB	20 / 15			ms
Output Isolation	Output to Output / Output to Chassis	500 / 500			VDC

GENERAL

Parameter	Conditions/Description	Min	Nom	Max	Units
Isolation Voltage	Input to Output Input to Chassis	4000 1500			VAC VAC
Efficiency	230VAC, 400W @ 24V		90		%
Safety Agency Approvals	EN60601-1 3rd Edition, UL60601-1, CSA601-1 UL File No. E230761				
Leakage Current	250VAC, 60Hz, 25°C 250VAC, 60Hz, 25°C option 04			300 150	µA µA
Signals	See Section 4.9				
Bias Supply	Always on. Current 250mA. 500mA option available	4.8	5.0	5.2	VDC
Reliability	Failures per million hours at 40°C and full load *powerMod* See Section 4.12. *powerPac* excludes fans *powerPac*			0.958 0.92	fpmh fpmh

EMC

Parameter	Standard	Level	Units
Emissions			
Conducted	EN55011, EN55022, FCC	Level B	
Radiated	EN55011, EN55022, FCC	Level B	
Harmonic Distortion	EN61000-3-2 Class A	Compliant	
Flicker & Fluctuation	EN61000-3-3	Compliant	
Immunity			
Electrostatic Discharge	EN61000-4-2	Level 2	
Radiated Immunity	EN61000-4-3	Level 3	
Fast Transients-Burst	EN61000-4-4	Level 3	
Input Line Surges	EN61000-4-5	Level 3	
Conducted Immunity	EN61000-4-6	Level 3	
Voltage Dips	EN61000-4-11	Compliant	

ENVIRONMENTAL

Parameter	Conditions/Description	Min	Nom	Max	Units
Operating Temperature		-20		+70	°C
Storage Temperature		-40		+85	°C
Derating	See Section 4.11 for full temperature deratings				
Relative Humidity	Non-condensing	5		95	%RH
Acoustic Noise	Measured from distance on 1m		37.3		dBA
Shock	3000 Bumps, 10G (16ms) half sine				
Vibration	1.5G	10		200	Hz

NOTES

1. This product is not intended for use as a stand alone unit and must be installed by qualified personnel.
2. The specifications contained herein are believed to be correct at time of publication and are subject to change without notice.
3. All specifications at nominal input, full load, 25°C unless otherwise stated.
4. When powering inductive or capacitive loads, it is recommended to use a blocking diode on the output.
5. For section references above go to the Xgen Designers Manual.

Standard

XC

AC/DC Power Supply

Ultra-high efficiency 1U size

Xgen Series

PLUG & PLAY POWER
next generation power solution

The XC family of power supplies provides up to 1340W in a slimline 1U package. Providing up to 12 isolated outputs, the XC family is the most flexible power supply in its class and brings affordable configurable power to the 400-1340W market. The slimline product boasts unrivalled power density saving valuable system space.

Combined with ultra high efficiencies, the XC family provides system designers with flexible instant solutions that significantly shorten and simplify system design-in time.

The XC family consists of 5 *powerPac* models in 400W, 700W, 1000W, 1200W and 1340W power levels. Each *powerPac* model may be populated with up to 6 *powerMods* selected from the table of *powerMods* shown below.

All configurations carry full safety agency approvals, UL60950, EN60950 and are CE marked.

FEATURES & OPTIONS

- Ultra high efficiency, up to 90%
- Extra low profile: 1U height (40mm)
- Plug & Play Power - allows fast custom configuration
- Individual output control signals
- All outputs fully floating
- Series / Parallel of multiple outputs
- Few electrolytic capacitors (all long life)
- Visual LED indicators
- 5V bias standby voltage provided
- SEMI F47 Compliant
- Standard Xgen product options include: Conformal Coating, Low Acoustic Noise, Low Leakage Current, Extra Ruggedisation, Connector, Cabling & Mounting options, Thermal Signals and Reverse Fans. See Section 4.10 for more information

APPLICATIONS INCLUDE

- Industrial machines
- Test and measurement
- Automation equipment
- Printing
- MIL-COTS applications

powerMods

MODEL	Vmin Vtrim	Vmin Vpot	Vnom	Vmax	Imax	Watts
Xg1	1.0	1.5	2.5	3.6	50A	125W
Xg2	1.5	3.2	5.0	6.0	40A	200W
Xg3	4.0	6.0	12.0	15.0	20A	240W
Xg4	8.0	12.0	24.0	30.0	10A	240W
Xg5	8.0	28	48.0	58.0	6A	288W
Xg7		5.0	24.0	28.0	5A	120W
Xg8 V1		5.0	24.0	28.0	3A	72W
V2		5.0	24.0	28.0	3A	72W

powerPacs

	MODEL	Watts
XC	XCA	400W
	XCB	700W
	XCC	1000W
	XCD	1200W
	XCE	1340W

MECHANICAL SPECIFICATIONS

Note: See diagrams on pages 34-37

XCA, XCB, XCC, XCD

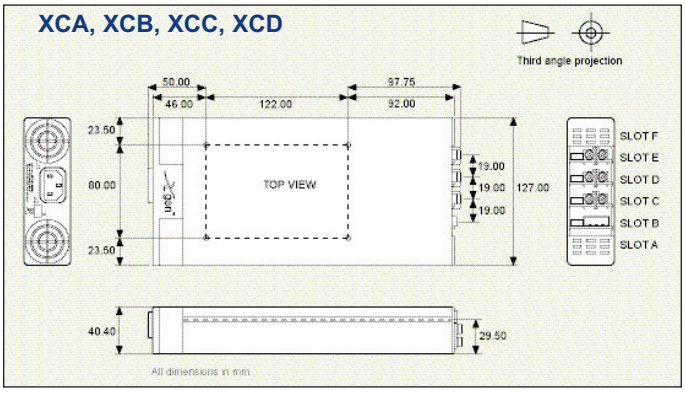

XCE

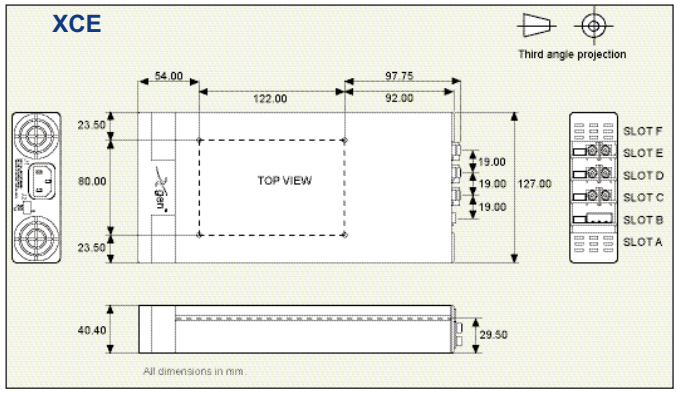

excelsys

SPECIFICATION applies to configured units consisting of ***powerMods*** plugged into the appropriate ***powerPac***

INPUT

Parameter	Conditions/Decription	Min	Nom	Max	Units
Input Voltage Range	Universal Input 47-440Hz	85 120		264 380	VAC VDC
Power Rating	XCA:400W, XCB:700W, XCC:1000W, XCD:1200W, XCE:1340W See Section 4.11 for line voltage deratings				
Input Current XCA	85VAC in 400W out		7.5		A
XCB	85VAC in 700W out		9.5		A
XCC, XCD	85VAC in 850W out		11.5		A
XCE	85VAC in 1000W out		14.0		A
Inrush Current	230VAC @ 25°C			25	A
Undervoltage Lockout	Shutdown	65		74	VAC
Fusing XCA	250V		F8A HRC		
XCB	250V		F10A HRC		
XCC, XCD	250V		F12A HRC		
XCE	250V		F15A HRC		

OUTPUT

Parameter	Conditions/Description	Min	Nom	Max	Units
***powerMod* Power**	As per *powerMod* table				
Output Adjustment Range	Manual: Multi-turn potentiometer. As per *powerMod* table Electronic: See Section 4.6				
Minimum Load			0		A
Line Regulation	For ±10% change from nominal line			±0.1	%
Load & Cross Regulation	For 25% to 75% load change			±0.2	%
Transient Response	For 25% to 75% load change Voltage Deviation Settling Time			10 250	% µs
Ripple and Noise	20MHz 100mV or 1.0% pk-pk				
Overvoltage Protection	Two-level. 1st level: Vset Tracking. 2nd level: Vmax (Latching)	110		125	%
Overcurrent Protection	Straight line with hiccup activation at <30% of Vnom See Section 4.6	110		120	%
Remote Sense	Max. line drop compensation. (except Xg7, Xg8)			0.5	VDC
Overshoot				2	%
Turn-on Delay	From AC in and Global Enable / powerMod Enable XCA,XCB,XCC,XCD From AC in and Global Enable / powermod Enable XCE			700 / 6 1000 / 6	ms ms
Rise Time	Monotonic			5	ms
Hold-up Time	For nominal output voltages at full load. XCA,XCB,XCC / XCD,XCE	20 / 15			ms
Output Isolation	Output to Output / Output to Chassis	500 / 500			VDC

GENERAL

Parameter	Conditions/Description	Min	Nom	Max	Units
Isolation Voltage	Input to Output Input to Chassis	3000 1500			VAC VAC
Efficiency	230VAC, 1340W @ 24V		90		%
Safety Agency Approvals	EN60950, UL60950, CSA22.2 No.950 UL File No. E181875				
Earth Leakage Current	250VAC, 60Hz, 25°C			1.5	mA
Signals	See Section 4.9				
Bias Supply	Always on. Current 250mA (30mA for XCE) 500mA option available	4.8	5.0	5.2	VDC
Reliability	Failures per million hours at 40°C and full load *powerMod* See Section 4.12. *powerPac* excludes fans *powerPac*			0.958 0.946	fpmh fpmh

EMC

Parameter	Standard	Level	Units
Emissions			
Conducted	EN55011, EN55022, FCC	Level B	
Radiated	EN55011, EN55022, FCC	Level B	
Harmonic Distortion	EN61000-3-2 Class A	Compliant	
Flicker & Fluctuation	EN61000-3-3	Compliant	
Immunity			
Electrostatic Discharge	EN61000-4-2	Level 2	
Radiated Immunity	EN61000-4-3	Level 3	
Fast Transients-Burst	EN61000-4-4	Level 3	
Input Line Surges	EN61000-4-5	Level 3	
Conducted Immunity	EN61000-4-6	Level 3	
Voltage Dips	EN61000-4-11, SEMI F47 compliant. See note 8.	Compliant	

ENVIRONMENTAL

Parameter	Conditions/Description	Min	Nom	Max	Units
Operating Temperature		-20		+70	°C
Storage Temperature		-40		+85	°C
Derating	See Section 4.11 for full temperature deratings				
Relative Humidity	Non-condensing	5		95	%RH
Shock	3000 Bumps, 10G (16ms) half sine				
Vibration	1.5G	10		200	Hz

NOTES

1. This product is not intended for use as a stand alone unit and must be installed by qualified personnel.
2. The specifications contained herein are believed to be correct at time of publication and are subject to change without notice.
3. All specifications at nominal input, full load, 25°C unless otherwise stated.
4. XCE: 1450W peak for 10s; Duty cycle 8%. *powerMod* output power must not exceed normal ratings.
5. When powering inductive or capacitive loads, it is recommended to use a blocking diode on the output.
6. Conformal Coating option: See Sections 3.1 and 4.10 for details.
7. For section references above go to the Xgen Designers Manual.
8. SEMI F47 compliant at input voltages >160VAC. Consult Excelsys for details.

400W-1340W

XV

Medically Approved

Ultra-high efficiency 1U size

CE cULus

Xgen Series

PLUG & PLAY POWER
next generation power solution

The XV family of medically approved power supplies provides up to an incredible 1340W in an extremely compact 1U package. Providing up to 12 isolated DC outputs, the XV family employs innovative plug & play architecture allowing users to instantly configure a custom power solution in less than 5 minutes!

The XV family consists of 5 *powerPacs* ranging in power levels from 400W to 1450W peak and 7 *powerMod* DC output modules. Simply select the appropriate *powerPac* and up to 6 *powerMods* from the tables below to complete your custom power supply.

The XV family boasts an industry leading power density of 17W/in^3 and ultra-high efficiencies (up to 90%). The significant system space savings and reduced heat dissipation radically simplify system design.

All configurations carry full safety agency approvals including UL60601-1, EN60601-1 3rd Edition and are CE marked.

FEATURES & OPTIONS

- EN60601-1 3rd edition approved
- Less than 300µA leakage current
- 150µA option available
- 4000VAC isolation
- Ultra high efficiency, up to 89%
- Extra low profile: 1U height (40mm)
- Plug & Play Power - allows fast custom configuration
- Individual output control signals
- All outputs fully floating
- Series / Parallel of multiple outputs
- Few electrolytic capacitors (all long life)
- 5V bias standby voltage provided
- Standard Xgen product options include: Conformal Coating, Low Acoustic Noise, Low Leakage Current, Extra Ruggedisation, Connector, Cabling & Mounting options, Thermal Signals and Reverse Fans. See Section 4.10 for more information

APPLICATIONS INCLUDE

- Clinical diagnostic equipment
- Medical lasers
- Dialysis equipment

powerMods

MODEL	Vmin		Vnom	Vmax	Imax	Watts
	Vtrim	Vpot				
Xg1	1.0	1.5	2.5	3.6	50A	125W
Xg2	1.5	3.2	5.0	6.0	40A	200W
Xg3	4.0	6.0	12.0	15.0	20A	240W
Xg4	8.0	12.0	24.0	30.0	10A	240W
Xg5	8.0	28	48.0	58.0	6A	288W
Xg7			5.0	24.0	28.0	5A	120W
Xg8 V1			5.0	24.0	28.0	3A	72W
V2			5.0	24.0	28.0	3A	72W

powerPacs

	MODEL	Watts
XV	XVA	400W
	XVB	700W
	XVC	1000W
	XVD	1200W
	XVE	1340W

MECHANICAL SPECIFICATIONS

Note: See diagrams on pages 34-37

XVA, XVB, XVC, XVD

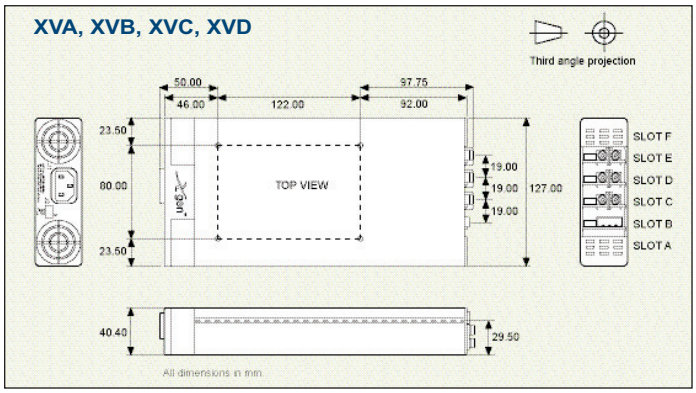

XVE

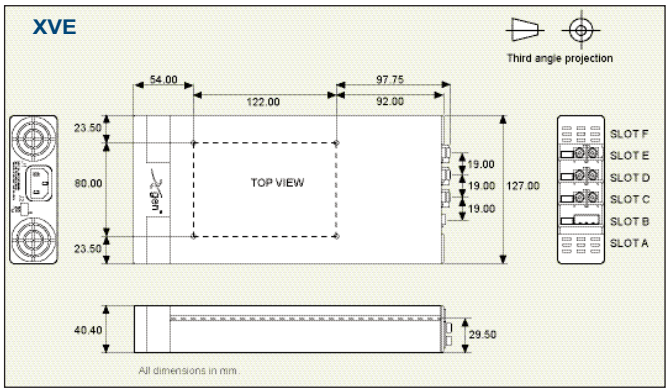

excelsys

SPECIFICATION applies to configured units consisting of ***powerMods*** plugged into the appropriate ***powerPac***

INPUT

Parameter	Conditions/Decription	Min	Nom	Max	Units
Input Voltage Range	Universal Input 47-440Hz	85 120		264 380	VAC VDC
Power Rating	XVA:400W, XVB:700W, XVC:1000W, XVD:1200W, XVE:1340W See Section 4.11 for line voltage deratings				
Input Current XVA	85VAC in 400W out		7.5		A
XVB	85VAC in 700W out		9.5		A
XVC, XVD	85VAC in 850W out		11.5		A
XVE	85VAC in 1000W out		14.0		A
Inrush Current	230VAC @ 25°C			25	A
Undervoltage Lockout	Shutdown	65		74	VAC
Fusing XVA	250V		F8A HRC		
XVB	250V		F10A HRC		
XVC, XVD	250V		F12A HRC		
XVE	250V		F15A HRC		

OUTPUT

Parameter	Conditions/Description	Min	Nom	Max	Units
***powerMod* Power**	As per *powerMod* table				
Output Adjustment Range	Manual: Multi-turn potentiometer. As per *powerMod* table Electronic: See Section 4.6				
Minimum Load			0		A
Line Regulation	For ±10% change from nominal line			±0.1	%
Load & Cross Regulation	For 25% to 75% load change			±0.2	%
Transient Response	For 25% to 75% load change Voltage Deviation Settling Time			10 250	% µs
Ripple and Noise	20MHz 100mV or 1.0% pk-pk				
Overvoltage Protection	Two-level. 1st level: Vset Tracking. 2nd level: Vmax (Latching)	110		125	%
Overcurrent Protection	Straight line with hiccup activation at <30% of Vnom See Section 4.6	110		120	%
Remote Sense	Max. line drop compensation. (except Xg7, Xg8)			0.5	VDC
Overshoot				2	%
Turn-on Delay	From AC in and Global Enable / powerMod Enable XVA,XVB,XVC,XVD From AC in and Global Enable / powerMod Enable XVE			700 / 6 1000 / 6	ms ms
Rise Time	Monotonic			5	ms
Hold-up Time	For nominal output voltages at full load. XVA,XVB,XVC / XVD,XVE	20 / 15			ms
Output Isolation	Output to Output / Output to Chassis	500 / 500			VDC

GENERAL

Parameter	Conditions/Description	Min	Nom	Max	Units
Isolation Voltage	Input to Output Input to Chassis	4000 1500			VAC VAC
Efficiency	230VAC, 1340W @ 24V		90		%
Safety Agency Approvals	EN60601-1, UL2601-1, CSA601-1 UL File No. E230761				
Leakage Current	250VAC, 60Hz, 25°C 250VAC, 60Hz, 25°C Option 04			300 150	µA µA
Signals	See Section 4.9				
Bias Supply	Always on. Current 250mA. (30mA for XVE) 500mA option available	4.8	5.0	5.2	VDC
Reliability	Failures per million hours at 40°C and full load *powerMod* See Section 4.12. *powerPac* excludes fans *powerPac*			0.958 0.946	fpmh fpmh

EMC

Parameter	Standard	Level	Units
Emissions			
Conducted	EN55011, EN55022, FCC	Level B	
Radiated	EN55011, EN55022, FCC	Level B	
Harmonic Distortion	EN61000-3-2 Class A	Compliant	
Flicker & Fluctuation	EN61000-3-3	Compliant	
Immunity			
Electrostatic Discharge	EN61000-4-2	Level 2	
Radiated Immunity	EN61000-4-3	Level 3	
Fast Transients-Burst	EN61000-4-4	Level 3	
Input Line Surges	EN61000-4-5	Level 3	
Conducted Immunity	EN61000-4-6	Level 3	
Voltage Dips	EN61000-4-11	Compliant	

ENVIRONMENTAL

Parameter	Conditions/Description	Min	Nom	Max	Units
Operating Temperature		-20		+70	°C
Storage Temperature		-40		+85	°C
Derating	See Section 4.11 for full temperature deratings				
Relative Humidity	Non-condensing	5		95	%RH
Shock	3000 Bumps, 10G (16ms) half sine				
Vibration	1.5G	10		200	Hz

NOTES

1. This product is not intended for use as a stand alone unit and must be installed by qualified personnel.
2. The specifications contained herein are believed to be correct at time of publication and are subject to change without notice.
3. All specifications at nominal input, full load, 25°C unless otherwise stated.
4. XVE: 1450W peak for 10s; Duty cycle 8%. *powerMod* output power must not exceed normal ratings.
5. When powering inductive or capacitive loads, it is recommended to use a blocking diode on the output.
6. For section references above go to the Xgen Designers Manual.

Low Acoustic Noise Power Supply

Ultra-high efficiency 1U size

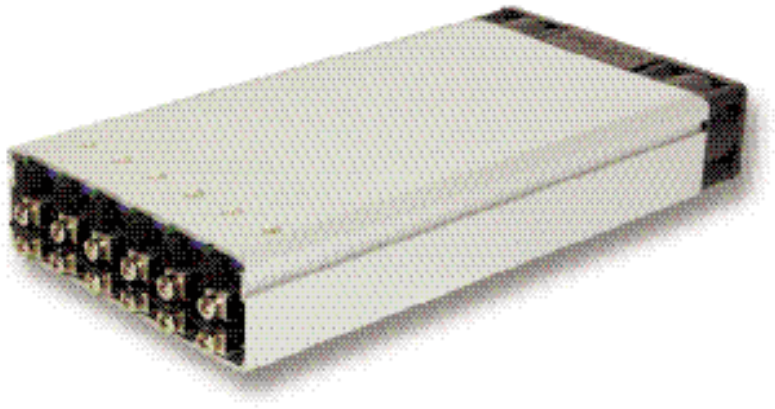

Xgen Series

PLUG & PLAY POWER
next generation power solution

FEATURES & OPTIONS

- Low Acoustic noise 42.7dBA
- Ultra high efficiency, up to 89%
- Extra low profile: 1U height (40mm)
- Plug & Play Power - allows fast custom configuration
- Individual output control signals
- All outputs fully floating
- Series / Parallel of multiple outputs
- Few electrolytic capacitors (all long life)
- Visual LED indicators
- 5V bias standby voltage provided
- SEMI F47 Compliant
- Standard Xgen product options include: Conformal Coating, Low Acoustic Noise, Low Leakage Current, Extra Ruggedisation, Connector, Cabling & Mounting options, Thermal Signals and Reverse Fans. See Section 4.10 for more information

APPLICATIONS INCLUDE

- Audio Equipment
- Test and measurement
- Telecommunications

The XQ family of low acoustic noise power supplies provides up to 1200W in an extremely compact 1U x 260mm x 127mm package. Boasting industry leading power density of 15W/in^3 and efficiencies of up to 90%, the XQ family employs an innovative plug & play architecture that allows users to instantly configure a custom power solution in less than 5 minutes!

Ideal for acoustic sensitive applications such as audio applications, the XQ family provides unmatched efficiency and high power density, made possible through the combination of low loss technologies and the best field-proven technologies in planar magnetics and surface mount electronics.

The XQ family consists of 3 *powerPac* models ranging in power levels from 400W to 1200W. each model may be populated with up to 6 *powerMods* selected from the table of *powerMods* shown below.

All configurations carry full safety agency approvals, UL60950, EN60950 and are CE marked.

powerMods

MODEL	Vmin		Vnom	Vmax	Imax	Watts
	Vtrim	Vpot				
Xg1	1.0	1.5	2.5	3.6	50A	125W
Xg2	1.5	3.2	5.0	6.0	40A	200W
Xg3	4.0	6.0	12.0	15.0	20A	240W
Xg4	8.0	12.0	24.0	30.0	10A	240W
Xg5	8.0	28	48.0	58.0	6A	288W
Xg7		5.0	24.0	28.0	5A	120W
Xg8 V1			5.0	24.0	28.0	3A	72W
V2			5.0	24.0	28.0	3A	72W

powerPacs

	MODEL	Watts
XQ	XQA	400W
	XQB	900W
	XQC	1200W

EFFICIENCY (typical)

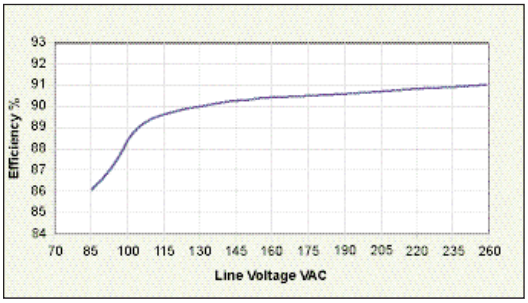

MECHANICAL SPECIFICATIONS

Note: See diagrams on pages 34-37

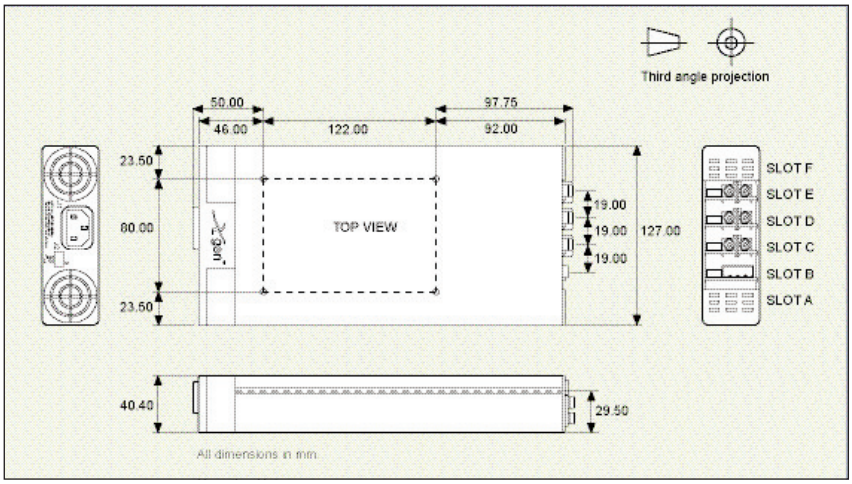

excelsys

SPECIFICATION applies to configured units consisting of ***powerMods*** plugged into the appropriate ***powerPac***

INPUT

Parameter	Conditions/Description	Min	Nom	Max	Units
Input Voltage Range	Universal Input 47-440Hz	85 120		264 380	VAC VDC
Power Rating	XQA:600W, XQB:900W, XQC:1200W See Section 4.11 for line voltage deratings				
Input Current XQA XQB XQC	85VAC in 400W out 85VAC in 850W out 85VACin 850W out		7.5 11.5 11.5		A A A
Inrush Current	230VAC @ 25°C			25	A
Undervoltage Lockout	Shutdown	65		74	VAC
Fusing XQA XQB XQC	250V 250V 250V		F8A HRC F12A HRC F12A HRC		

OUTPUT

Parameter	Conditions/Description	Min	Nom	Max	Units
***powerMod* Power**	As per *powerMod* table				
Output Adjustment Range	Manual: Multi-turn potentiometer. As per *powerMod* table Electronic: See Section 4.6				
Minimum Load			0		A
Line Regulation	For ±10% change from nominal line			±0.1	%
Load & Cross Regulation	For 25% to 75% load change			±0.2	%
Transient Response	For 25% to 75% load change Voltage Deviation Settling Time			10 250	% µs
Ripple and Noise	20MHz 100mV or 1.0% pk-pk				
Overvoltage Protection	1st level: Vset Tracking. 2nd level: Vmax (Latching)	110		125	%
Overcurrent Protection	Straight line with hiccup activation at <30% of Vnom See Section 4.6	110		120	%
Remote Sense	Max. line drop compensation. (except Xg7, Xg8)			0.5	VDC
Overshoot				2	%
Turn-on Delay	From AC in and Global Enable / powerMod Enable			700 / 6	ms
Rise Time	Monotonic			5	ms
Hold-up Time	For nominal output voltages at full load. XQA, XQB/XQC	20 / 15			ms
Output Isolation	Output to Output / Output to Chassis	500 / 500			VDC

GENERAL

Parameter	Conditions/Description	Min	Nom	Max	Units
Isolation Voltage	Input to Output Input to Chassis	3000 1500			VAC VAC
Efficiency	230VAC, 1200W @ 24V		90		%
Safety Agency Approvals	EN60950, UL60950, CSA22.2 No.950 UL File No. E181875				
Leakage Current	250VAC, 60Hz, 25°C			1.5	mA
Signals	See Section 4.9				
Bias Supply	Always on. Current 250mA. 500mA option available	4.8	5.0	5.2	VDC
Reliability	Failures per million hours at 40°C and full load *powerMod* See Section 4.12. *powerPac* excludes fans *powerPac*			0.958 0.946	fpmh fpmh

EMC

Parameter	Standard	Level	Units
Emissions			
Conducted	EN55011, EN55022, FCC	Level B	
Radiated	EN55011, EN55022, FCC	Level B	
Harmonic Distortion	EN61000-3-2 Class A	Compliant	
Flicker & Fluctuation	EN61000-3-3	Compliant	
Immunity			
Electrostatic Discharge	EN61000-4-2	Level 2	
Radiated Immunity	EN61000-4-3	Level 3	
Fast Transients-Burst	EN61000-4-4	Level 3	
Input Line Surges	EN61000-4-5	Level 3	
Conducted Immunity	EN61000-4-6	Level 3	
Voltage Dips	EN61000-4-11, SEMI F47 compliant. See note 7.	Compliant	

ENVIRONMENTAL

Parameter	Conditions/Description	Min	Nom	Max	Units
Operating Temperature		-20		+70	°C
Storage Temperature		-40		+85	°C
Derating	See Section 4.11 for full temperature deratings				
Relative Humidity	Non-condensing	5		95	%RH
Acoustic Noise	Measured from distance of 1m		42.7		dBA
Shock	3000 Bumps, 10G (16ms) half sine				
Vibration	1.5G	10		200	Hz

NOTES

1. This product is not intended for use as a stand alone unit and must be installed by qualified personnel.
2. The specifications contained herein are believed to be correct at time of publication and are subject to change without notice.
3. All specifications at nominal input, full load, 25°C unless otherwise stated.
4. When powering inductive or capacitive loads, it is recommended to use a blocking diode on the output.
5. Conformal Coating option: See Sections 3.1 and 4.10 for details.
6. For section references above go to the Xgen Designers Manual.
7. SEMI F47 compliant at input voltages >160VAC. Consult Excelsys for details.

Medical Power Supply

Low Acoustic Noise 1U size

Xgen Series

PLUG & PLAY POWER
next generation power solution

The XZ family of low acoustic noise medically approved power supplies provides up to 1200W in an extremely compact 1U x 260mm x 127mm package. Boasting industry leading power density of 15W/in^3 and efficiencies of up to 90%, the XZ family employs an innovative plug & play architecture that allows users to instantly configure a custom power solution in less than 5 minutes!

Ideal for acoustic sensitive medical applications the XZ family provides unmatched efficiency and high power density, made possible through the combination of low loss technologies and the best field-proven technologies in planar magnetics and surface mount electronics.

The XZ family consists of 3 *powerPac* models ranging in power levels from 400W to 1200W. Each model may be populated with up to 6 *powerMods* selected from the table of *powerMods* shown below.

All configurations carry full safety agency approvals, UL60601-1, EN60601-1 3rd Edition and are CE marked.

FEATURES & OPTIONS

- Low Acoustic noise 42.7dBA
- EN60601-1 3rd edition Approved
- Less than 300µA leakage current
- 150µA option available
- 4000VAC isolation
- Ultra high efficiency, up to 89%
- Extra low profile: 1U height (40mm)
- Plug & Play Power - allows fast custom configuration
- Individual output control signals
- All outputs fully floating
- Series / Parallel of multiple outputs
- Few electrolytic capacitors (all long life)
- 5V bias standby voltage provided
- Standard Xgen product options include: Conformal Coating, Low Acoustic Noise, Low Leakage Current, Extra Ruggedisation, Connector, Cabling & Mounting options, Thermal Signals and Reverse Fans. See Section 4.10 for more information

APPLICATIONS INCLUDE

- Clinical diagnostic equipment
- Medical lasers
- Dialysis equipment

powerMods

MODEL	Vmin Vtrim	Vmin Vpot	Vnom	Vmax	Imax	Watts
Xg1	1.0	1.5	2.5	3.6	41.6A	104W
Xg2	1.5	3.2	5.0	6.0	33.2A	166W
Xg3	4.0	6.0	12.0	15.0	16.67A	200W
Xg4	8.0	12.0	24.0	30.0	8.33A	200W
Xg5	8.0	28	48.0	58.0	5A	240W
Xg7		5.0	24.0	28.0	4.17A	100W
Xg8 V1		5.0	24.0	28.0	2.5A	60W
V2		5.0	24.0	28.0	2.5A	60W

powerPacs

	MODEL	Watts
XZ	XZA	400W
	XZB	900W
	XZC	1200W

MECHANICAL SPECIFICATIONS

Note: See diagrams on pages 34-37

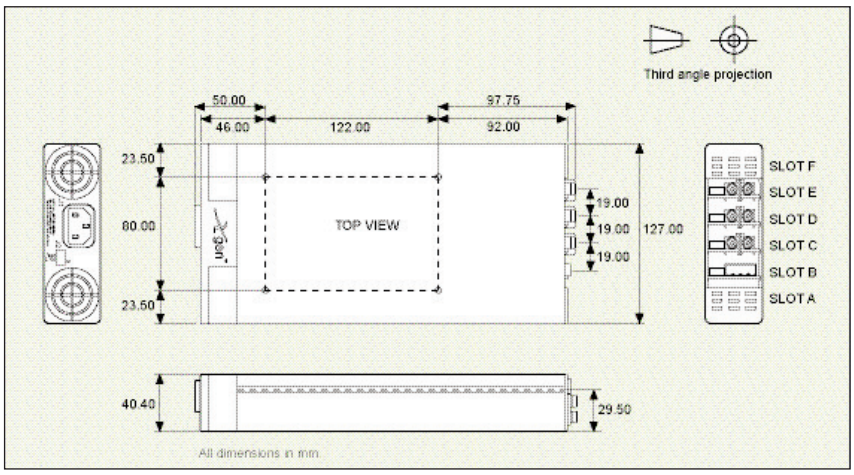

EFFICIENCY (typical)

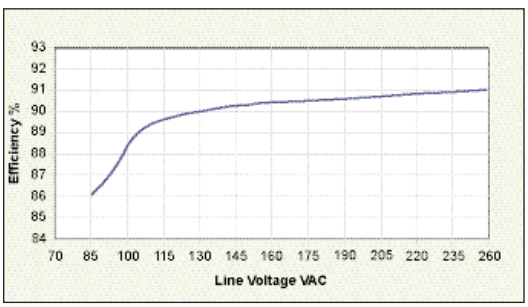

excelsys

SPECIFICATION applies to configured units consisting of ***powerMods*** plugged into the appropriate ***powerPac***

INPUT

Parameter	Conditions/Description	Min	Nom	Max	Units
Input Voltage Range	Universal Input 47-440Hz.	85 120		264 380	VAC VDC
Power Rating	XZA:600W, XZB:900W, XZC:1200W See Section 4.11 for line voltage deratings				
Input Current XZA XZB XZC	85VAC in 400W out 85VAC in 850W out 85VAC in 850W out		7.5 11.5 11.5		A A A
Inrush Current	230VAC @ 25°C			25	A
Undervoltage Lockout	Shutdown	65		74	VAC
Fusing XZA XZB XZC	250V 250V 250V		F8A HRC F12A HRC F12A HRC		

OUTPUT

Parameter	Conditions/Description	Min	Nom	Max	Units
***powerMod* Power**	As per *powerMod* table				
Output Adjustment Range	Manual: Multi-turn potentiometer. As per *powerMod* table Electronic: See Section 4.6				
Minimum Load			0		A
Line Regulation	For ±10% change from nominal line			±0.1	%
Load & Cross Regulation	For 25% to 75% load change			±0.2	%
Transient Response	For 25% to 75% load change Voltage Deviation Settling Time			10 250	% µs
Ripple and Noise	20MHz 100mV or 1.0% pk-pk				
Overvoltage Protection	1st level: Vset Tracking. 2nd level: Vmax (Latching)	110		125	%
Overcurrent Protection	Straight line with hiccup activation at <30% of Vnom See Section 4.6	110		120	%
Remote Sense	Max. line drop compensation. (except Xg7, Xg8)			0.5	VDC
Overshoot				2	%
Turn-on Delay	From AC in and Global Enable / powerMod Enable			700 / 6	ms
Rise Time	Monotonic			5	ms
Hold-up Time	For nominal output voltages at full load. XZA, XXB/XZC	20 / 15			ms
Output Isolation	Output to Output / Output to Chassis	500 / 500			VDC

GENERAL

Parameter	Conditions/Description	Min	Nom	Max	Units
Isolation Voltage	Input to Output Input to Chassis	4000 1500			VAC VAC
Efficiency	230VAC, 1200W @ 24V		90		%
Safety Agency Approvals	EN60601-1, UL60601-1 3rd Edition, CSA601-1 UL File no. E230761				
Leakage Current	250VAC, 60Hz, 25°C 250VAC, 60Hz, 25°C Option 04			300 150	µA µA
Signals	See Section 4.9				
Bias Supply	Always on. Current 250mA. 500mA option available	4.8	5.0	5.2	VDC
Reliability	Failures per million hours at 40°C and full load *powerMod* See Section 4.12. *powerPac* excludes fans *powerPac*			0.958 0.946	fpmh fpmh

EMC

Parameter	Standard	Level	Units
Emissions			
Conducted	EN55011, EN55022, FCC	Level B	
Radiated	EN55011, EN55022, FCC	Level B	
Harmonic Distortion	EN61000-3-2 Class A	Compliant	
Flicker & Fluctuation	EN61000-3-3	Compliant	
Immunity			
Electrostatic Discharge	EN61000-4-2	Level 2	
Radiated Immunity	EN61000-4-3	Level 3	
Fast Transients-Burst	EN61000-4-4	Level 3	
Input Line Surges	EN61000-4-5	Level 3	
Conducted Immunity	EN61000-4-6	Level 3	
Voltage Dips	EN61000-4-11	Compliant	

ENVIRONMENTAL

Parameter	Conditions/Description	Min	Nom	Max	Units
Operating Temperature		-20		+70	°C
Storage Temperature		-40		+85	°C
Derating	See Section 4.11 for full temperature deratings				
Relative Humidity	Non-condensing	5		95	%RH
Acoustic Noise	Measured from distance of 1m		42.7		dBA
Shock	3000 Bumps, 10G (16ms) half sine				
Vibration	1.5G	10		200	Hz

NOTES

1. This product is not intended for use as a stand alone unit and must be installed by qualified personnel.
2. The specifications contained herein are believed to be correct at time of publication and are subject to change without notice.
3. All specifications at nominal input, full load, 25°C unless otherwise stated.
4. See Xgen Designers Manual for detailed power ratings.
5. When powering inductive or capacitive loads, it is recommended to use a blocking diode on the output.
6. For section references above go to the Xgen Designers Manual.

XB

Ultra Low Noise Power Supply

Ultra-high efficiency 1U size

CE c UL us

Xgen Series

PLUG & PLAY POWER
next generation power solution

FEATURES & OPTIONS

- Low Acoustic noise 38.3dBA
- Ultra high efficiency, up to 89%
- Extra low profile: 1U height (40mm)
- Plug & Play Power - allows fast custom configuration
- Individual output control signals
- All outputs fully floating
- Series / Parallel of multiple outputs
- Few electrolytic capacitors (all long life)
- Visual LED indicators
- 5V bias standby voltage provided
- Standard Xgen product options include: Conformal Coating, Low Acoustic Noise, Low Leakage Current, Extra Ruggedisation, Connector, Cabling & Mounting options, Thermal Signals and Reverse Fans. See Section 4.10 for more information

APPLICATIONS INCLUDE

- Audio Equipment
- Test and measurement
- Telecommunications

- For Medical applications, See XW

The XB family of Ultra Low Noise power supplies provides up to 800W in an extremely compact 1U x 260mm x 127mm package. With efficiencies of up to 90%, the XB family employs an innovative plug & play architecture that allows users to instantly configure a custom power solution in less than 5 minutes!

Ideal for acoustic sensitive applications such as audio applications, the XB family provides unmatched efficiency and high power density, made possible through the combination of low loss technologies and the best field-proven technologies in planar magnetics and surface mount electronics.

The XB family consists of 3 *powerPac* models ranging in power levels from 400W to 800W. Each model may be populated with up to 6 *powerMods* selected from the table of *powerMods* shown below.

All configurations carry full safety agency approvals, UL60950, EN60950 and are CE marked.

powerMods

MODEL	Vmin		Vnom	Vmax	Imax	Watts
	Vtrim	Vpot				
Xg1	1.0	1.5	2.5	3.6	41.6A	104W
Xg2	1.5	3.2	5.0	6.0	33.2A	166W
Xg3	4.0	6.0	12.0	15.0	16.67A	200W
Xg4	8.0	12.0	24.0	30.0	8.33A	200W
Xg5	8.0	28	48.0	58.0	5A	240W
Xg7		5.0	24.0	28.0	4.17A	100W
Xg8 V1		5.0	24.0	28.0	2.5A	60W
V2		5.0	24.0	28.0	2.5A	60W

powerPacs

	MODEL	Watts
XB	XBA	400W
	XBB	600W
	XBC	800W

powerMod Maximum Power Outputs (W) have been derated to operate with XB range of Ultra Low-Noise Power Supplies. See Section 4.11 Xgen Designers' Manual for full derating details.

EFFICIENCY (typical)

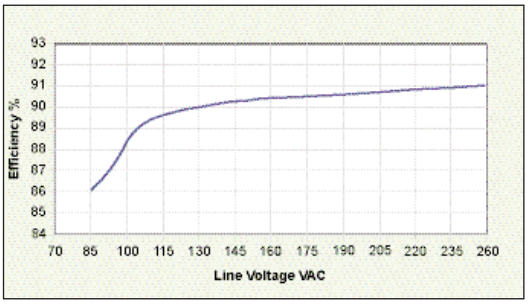

MECHANICAL SPECIFICATIONS

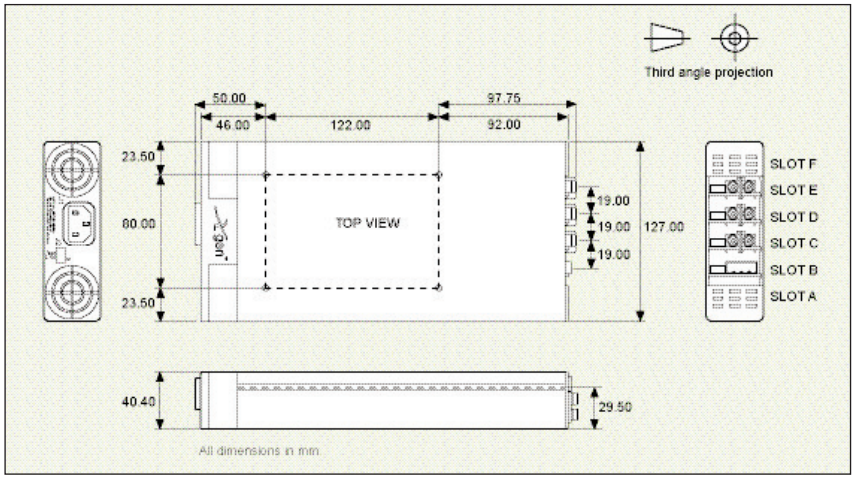

excelsys

SPECIFICATION applies to configured units consisting of ***powerMods*** plugged into the appropriate ***powerPac***

INPUT

Parameter	Conditions/Description	Min	Nom	Max	Units
Input Voltage Range	Universal Input 47-440Hz.	85 120		264 380	VAC VDC
Power Rating	XBA:400W, XBB:600W, XBC:800W See Section 4.11 for line voltage deratings				
Input Current XBA XBB XBC	85VAC in 400W out 85VAC in 600W out 85VAC in 625W out		7.5 9.5 11.5		A A A
Inrush Current	230VAC @ 25°C			25	A
Undervoltage Lockout	Shutdown	65		74	VAC
Fusing XBA XBB XBC	250V 250V 250V		F8A HRC F10A HRC F12A HRC		

OUTPUT

Parameter	Conditions/Description	Min	Nom	Max	Units
***powerMod* Power**	As per *powerMod* table				
Output Adjustment Range	Manual: Multi-turn potentiometer. As per *powerMod* table Electronic: See Section 4.6				
Minimum Load			0		A
Line Regulation	For ±10% change from nominal line			±0.1	%
Load & Cross Regulation	For 25% to 75% load change			±0.2	%
Transient Response	For 25% to 75% load change Voltage Deviation Settling Time			10 250	% µs
Ripple and Noise	20MHz 100mV or 1.0% pk-pk				
Overvoltage Protection	1st level: Vset Tracking. 2nd level: Vmax (Latching)	110		125	%
Overcurrent Protection	Straight line with hiccup activation at <30% of Vnom See Section 4.6	110		120	%
Remote Sense	Max. line drop compensation. (except Xg7, Xg8)			0.5	VDC
Overshoot				2	%
Turn-on Delay	From AC in and Global Enable / powerMod Enable			700 / 6	ms
Rise Time	Monotonic			5	ms
Hold-up Time	For nominal output voltages at full load	20			ms
Output Isolation	Output to Output / Output to Chassis	500 / 500			VDC

GENERAL

Parameter	Conditions/Description	Min	Nom	Max	Units
Isolation Voltage	Input to Output Input to Chassis	3000 1500			VAC VAC
Efficiency	230VAC, 800W @ 24V		90		%
Safety Agency Approvals	EN60950, UL60950, CSA22.2 No.950 UL File No. E181875				
Leakage Current	250VAC, 60Hz, 25°C			1.5	mA
Signals	See Section 4.9				
Bias Supply	Always on. Current 250mA. 500mA option available	4.8	5.0	5.2	VDC
Reliability	Failures per million hours at 40°C and full load *powerMod* See Section 4.12. *powerPac* excludes fans *powerPac*			0.958 0.946	fpmh fpmh

EMC

Parameter	Standard		Level		Units
Emissions					
Conducted	EN55011, EN55022, FCC		Level B		
Radiated	EN55011, EN55022, FCC		Level B		
Harmonic Distortion	EN61000-3-2 Class A		Compliant		
Flicker & Fluctuation	EN61000-3-3		Compliant		
Immunity					
Electrostatic Discharge	EN61000-4-2		Level 2		
Radiated Immunity	EN61000-4-3		Level 3		
Fast Transients-Burst	EN61000-4-4		Level 3		
Input Line Surges	EN61000-4-5		Level 3		
Conducted Immunity	EN61000-4-6		Level 3		
Voltage Dips	EN61000-4-11		Compliant		

ENVIRONMENTAL

Parameter	Conditions/Description	Min	Nom	Max	Units
Operating Temperature		-20		+70	°C
Storage Temperature		-40		+85	°C
Derating	See Section 4.11 for full temperature deratings				
Relative Humidity	Non-condensing	5		95	%RH
Acoustic Noise	Measured from distance of 1m		38.3		dBA
Shock	3000 Bumps, 10G (16ms) half sine				
Vibration	1.5G	10		200	Hz

NOTES

1. This product is not intended for use as a stand alone unit and must be installed by qualified personnel.
2. The specifications contained herein are believed to be correct at time of publication and are subject to change without notice.
3. All specifications at nominal input, full load, 25°C unless otherwise stated.
4. When powering inductive or capacitive loads, it is recommended to use a blocking diode on the output.
5. Conformal Coating option: See Sections 3.1 and 4.10 for details.
6. For section references above go to the Xgen Designers Manual.

XW

Medically Approved
Ultra Low Noise Power Supply
Ultra-high efficiency 1U size

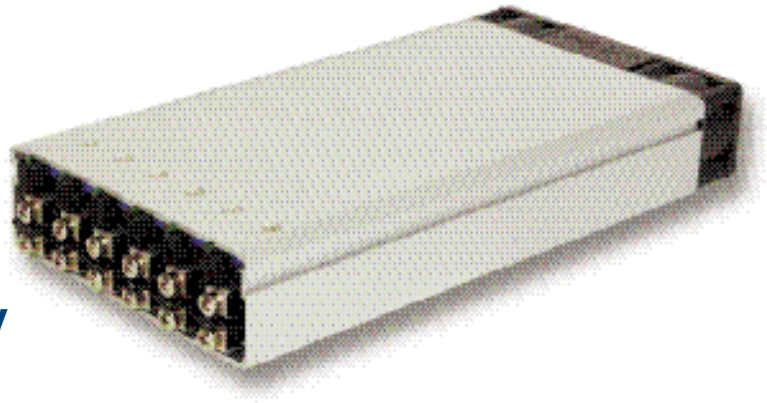

CE c UL us

Xgen Series

PLUG & PLAY POWER
next generation power solution

FEATURES & OPTIONS

- Low Acoustic noise 38.3dBA
- EN60601-1 3rd edition Approved
- Less than 300µA leakage current
- 150µA option available
- 4000VAC isolation
- Ultra high efficiency, up to 89%
- Extra low profile: 1U height (40mm)
- Plug & Play Power - allows fast custom configuration
- Individual output control signals
- All outputs fully floating
- Series / Parallel of multiple outputs
- Few electrolytic capacitors (all long life)
- 5V bias standby voltage provided
- Standard Xgen product options include: Conformal Coating, Low Acoustic Noise, Low Leakage Current, Extra Ruggedisation, Connector, Cabling & Mounting options, Thermal Signals and Reverse Fans. See Section 4.10 for more information

APPLICATIONS INCLUDE

- Clinical diagnostic equipment
- Medical lasers
- Dialysis equipment

- For Standard applications see XB

The XW family of medically approved Ultra Low Noise power supplies provides up to 800W in an extremely compact 1U package. Providing up to 12 isolated DC outputs, the XW family employs innovative plug & play architecture allowing users to instantly configure a custom power solution in less than 5 minutes!

The XW family consists of 3 *powerPacs* ranging in power levels from 400W to 800W peak and 7 *powerMod* DC output modules. Simply select the appropriate *powerPac* and up to 6 *powerMods* from the tables below to complete your custom power supply.

The XW family boasts ultra-high efficiencies (up to 90%). The significant system space savings and reduced heat dissipation radically simplify system design.

All configurations carry full safety agency approvals including UL60601-1, EN60601-1 3rd Edition and are CE marked.

powerMods

MODEL	Vmin		Vnom	Vmax	Imax	Watts
	Vtrim	Vpot				
Xg1	1.0	1.5	2.5	3.6	41.6A	104W
Xg2	1.5	3.2	5.0	6.0	33.2A	166W
Xg3	4.0	6.0	12.0	15.0	16.67A	200W
Xg4	8.0	12.0	24.0	30.0	8.33A	200W
Xg5	8.0	28	48.0	58.0	5A	240W
Xg7			5.0	24.0	28.0	4.17A	100W
Xg8 V1			5.0	24.0	28.0	2.5A	60W
V2			5.0	24.0	28.0	2.5A	60W

powerPacs

	MODEL	Watts
XW	XWA	400W
	XWB	600W
	XWC	800W

powerMod Maximum Power Outputs (W) have been derated to operate with XW range of Ultra Low-Noise Power Supplies. See Section 4.11 Xgen Designers' Manual for full derating details.

MECHANICAL SPECIFICATIONS

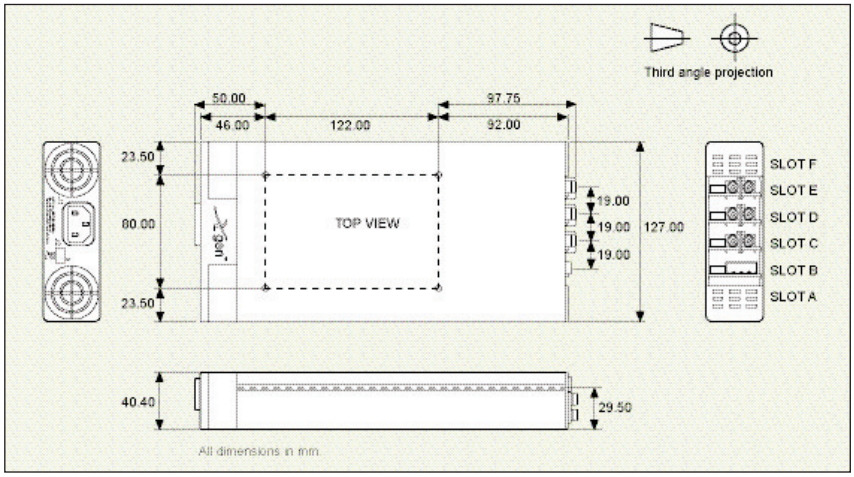

EFFICIENCY (typical)

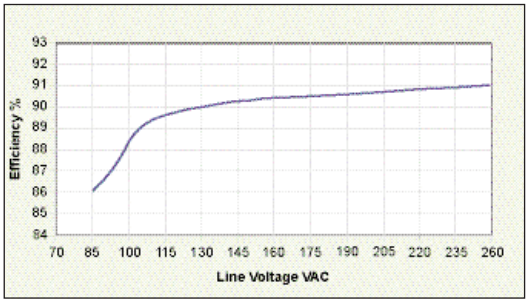

excelsys

SPECIFICATION applies to configured units consisting of ***powerMods*** plugged into the appropriate ***powerPac***

INPUT

Parameter	Conditions/Decription	Min	Nom	Max	Units
Input Voltage Range	Universal Input 47-440Hz.	85 120		264 380	VAC VDC
Power Rating	XWA:400W, XWB:600W, XWC:800W See Section 4.11 for line voltage deratings				
Input Current XWA XWB XWC	85VAC in 400W out 85VAC in 600W out 85VAC in 625W out		7.5 9.5 11.5		A A A
Inrush Current	230VAC @ 25°C			25	A
Undervoltage Lockout	Shutdown	65		74	VAC
Fusing XWA XWB XWC	250V 250V 250V		F8A HRC F10A HRC F12A HRC		

OUTPUT

Parameter	Conditions/Description	Min	Nom	Max	Units
***powerMod* Power**	As per *powerMod* table				
Output Adjustment Range	Manual: Multi-turn potentiometer. As per *powerMod* table Electronic: See Section 4.6				
Minimum Load			0		A
Line Regulation	For ±10% change from nominal line			±0.1	%
Load & Cross Regulation	For 25% to 75% load change			±0.2	%
Transient Response	For 25% to 75% load change Voltage Deviation Settling Time			10 250	% µs
Ripple and Noise	20MHz 100mV or 1.0% pk-pk				
Overvoltage Protection	Two-level. 1st level: Vset Tracking. 2nd level: Vmax (Latching)	110		125	%
Overcurrent Protection	Straight line with hiccup activation at <30% of Vnom See Section 4.6	110		120	%
Remote Sense	Max. line drop compensation. (except Xg7, Xg8)			0.5	VDC
Overshoot				2	%
Turn-on Delay	From AC in and Global Enable / powerMod Enable			700 / 6	ms
Rise Time	Monotonic			5	ms
Hold-up Time	For nominal output voltages at full load	20			ms
Output Isolation	Output to Output / Output to Chassis	500 / 500			VDC

GENERAL

Parameter	Conditions/Description	Min	Nom	Max	Units
Isolation Voltage	Input to Output Input to Chassis	4000 1500			VAC VAC
Efficiency	230VAC, 800W @ 24V		90		%
Safety Agency Approvals	EN60601-1 3rd Edition, UL60601-1, CSA601-1 UL File No. E230761				
Leakage Current	250VAC, 60Hz, 25°C 250VAC, 60Hz, 25°C option 04			300 150	µA µA
Signals	See Section 4.9				
Bias Supply	Always on. Current 250mA. 500mA option available	4.8	5.0	5.2	VDC
Reliability	Failures per million hours at 40°C and full load *powerMod* See Section 4.12. *powerPac* excludes fans *powerPac*			0.958 0.946	fpmh fpmh

EMC

Parameter	Standard		Level		Units
Emissions					
Conducted	EN55011, EN55022, FCC		Level B		
Radiated	EN55011, EN55022, FCC		Level B		
Harmonic Distortion	EN61000-3-2 Class A		Compliant		
Flicker & Fluctuation	EN61000-3-3		Compliant		
Immunity					
Electrostatic Discharge	EN61000-4-2		Level 2		
Radiated Immunity	EN61000-4-3		Level 3		
Fast Transients-Burst	EN61000-4-4		Level 3		
Input Line Surges	EN61000-4-5		Level 3		
Conducted Immunity	EN61000-4-6		Level 3		
Voltage Dips	EN61000-4-11		Compliant		

ENVIRONMENTAL

Parameter	Conditions/Description	Min	Nom	Max	Units
Operating Temperature		-20		+70	°C
Storage Temperature		-40		+85	°C
Derating	See Section 4.11 for full temperature deratings				
Relative Humidity	Non-condensing	5		95	%RH
Acoustic Noise	Measured from distance of 1m		38.3		dBA
Shock	3000 Bumps, 10G (16ms) half sine				
Vibration	1.5G	10		200	Hz

NOTES

1. This product is not intended for use as a stand alone unit and must be installed by qualified personnel.
2. The specifications contained herein are believed to be correct at time of publication and are subject to change without notice.
3. When powering inductive or capacitive loads, it is recommended to use a blocking diode on the output.
4. All specifications at nominal input, full load, 25°C unless otherwise stated.
5. For section references above go to the Xgen Designers Manual.

XH

Hi-Temp Power Supply

Ultra-high efficiency 1U size

Xgen Series

PLUG & PLAY POWER
next generation power solution

FEATURES & OPTIONS

- Ultra high efficiency, up to 89%
- Extra low profile: 1U height (40mm)
- Plug & Play Power - allows fast custom configuration
- Individual output control signals
- All outputs fully floating
- Series / Parallel of multiple outputs
- Few electrolytic capacitors (all long life)
- Visual LED indicators
- 5V bias standby voltage provided
- SEMI F47 Compliant
- Up to 600W at 70degC
- Standard Xgen product options include: Conformal Coating, Low Acoustic Noise, Low Leakage Current, Extra Ruggedisation, Connector, Cabling & Mounting options, Thermal Signals and Reverse Fans. See Section 4.10 for more information

APPLICATIONS INCLUDE

- Industrial equipment
- Telecommunications
- Outdoor display systems

The XH family of high temperature power supplies provides up to 600W in an extremely compact 1U x 260mm x 127mm package. Designed as a configurable power supply, the XH family employs the innovative plug and play architecture that allows users to instantly configure a custom power solution in less than 5 minutes.

The XH family is ideal for use in harsh environments where there can be high ambient temperatures and wide temperature fluctuations. Operation at higher temperatures is made possible through employment of leading edge technologies and cooling techniques, making it possible for the XH to achieve unprecedented efficiencies of up to 90%.

The XH family consists of 2 *powerPac* models ranging in power levels from 400W to 600W. Each model may be populated with up to 6 *powerMods* selected from the table of powerMods shown below. All configurations carry full safety agency approvals. UL60950 and EN60950 2nd edition and carry the CE Mark.

powerMods

MODEL	Vmin		Vnom	Vmax	Imax	Watts
	Vtrim	Vpot				
Xg1	1.0	1.5	2.5	3.6	26A	65W
Xg2	1.5	3.2	5.0	6.0	25A	100W
Xg3	4.0	6.0	12.0	15.0	10A	120W
Xg4	8.0	12.0	24.0	30.0	5A	120W
Xg5	8.0	28	48.0	58.0	3A	144W
Xg7			5.0	24.0	28.0	2.5A	60W
Xg8 V1			5.0	24.0	28.0	1.5A	36W
V2			5.0	24.0	28.0	1.5A	36W

powerPacs

	MODEL	Watts
XH	XHA	400W
	XHB	600W

EFFICIENCY (typical)

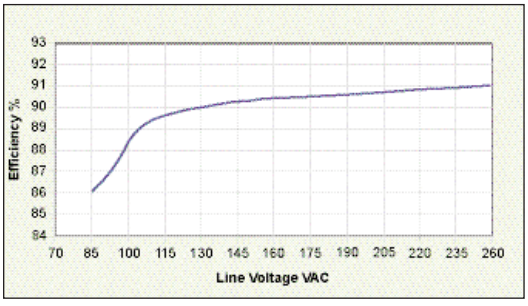

MECHANICAL SPECIFICATIONS

Note: See diagrams on pages 34-37

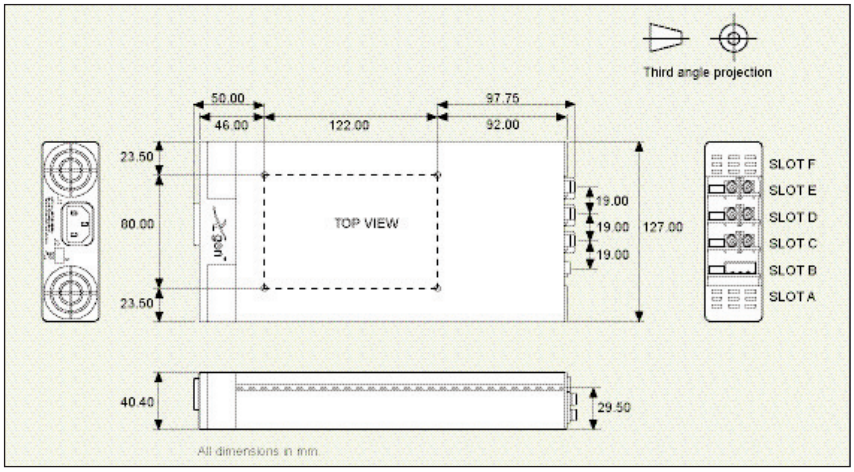

excelsys

SPECIFICATION applies to configured units consisting of ***powerMods*** plugged into the appropriate ***powerPac***

INPUT

Parameter	Conditions/Description	Min	Nom	Max	Units
Input Voltage Range	Universal Input 47-440Hz	85 120		264 380	VAC VDC
Power Rating	XHA:400W, XHB:600W See Section 4.11 for line voltage deratings				
Input Current XHA XHB	85VAC in 400W out 85VAC in 600W out		6.5 7.5		A A
Inrush Current	230VAC @ 25°C			25	A
Undervoltage Lockout	Shutdown	65		74	VAC
Fusing XHA XHB	250V 250V		F10A HRC F12A HRC		

OUTPUT

Parameter	Conditions/Description	Min	Nom	Max	Units
***powerMod* Power**	As per *powerMod* table				
Output Adjustment Range	Manual: Multi-turn potentiometer. As per *powerMod* table Electronic: See Section 4.6				
Minimum Load			0		A
Line Regulation	For ±10% change from nominal line			±0.1	%
Load & Cross Regulation	For 25% to 75% load change			±0.2	%
Transient Response	For 25% to 75% load change Voltage Deviation Settling Time			10 250	% µs
Ripple and Noise	20MHz 100mV or 1.0% pk-pk				
Overvoltage Protection	1st level: Vset Tracking. 2nd level: Vmax (Latching)	110		125	%
Overcurrent Protection	Straight line with hiccup activation at <30% of Vnom See Section 4.6	110		120	%
Remote Sense	Max. line drop compensation. (except Xg7, Xg8)			0.5	VDC
Overshoot				2	%
Turn-on Delay	From AC in and Global Enable / powerMod Enable			700 / 6	ms
Rise Time	Monotonic			5	ms
Hold-up Time	For nominal output voltages at full load.	20			ms
Output Isolation	Output to Output / Output to Chassis	500 / 500			VDC

GENERAL

Parameter	Conditions/Description	Min	Nom	Max	Units
Isolation Voltage	Input to Output Input to Chassis	3000 1500			VAC VAC
Efficiency	230VAC, 600W @ 24V		90		%
Safety Agency Approvals	EN60950, UL60950, CSA22.2 No.950 UL File No. E181875				
Leakage Current	250VAC, 60Hz, 25°C		300		mA
Signals	See Section 4.9				
Bias Supply	Always on. Current 250mA. 500mA option available	4.8	5.0	5.2	VDC
Reliability	Failures per million hours at 40°C and full load *powerMod* See Section 4.12. *powerPac* excludes fans *powerPac*			0.958 0.946	fpmh fpmh

EMC

Parameter	Standard		Level		Units
Emissions					
Conducted	EN55011, EN55022, FCC		Level B		
Radiated	EN55011, EN55022, FCC		Level B		
Harmonic Distortion	EN61000-3-2 Class A		Compliant		
Flicker & Fluctuation	EN61000-3-3		Compliant		
Immunity					
Electrostatic Discharge	EN61000-4-2		Level 2		
Radiated Immunity	EN61000-4-3		Level 3		
Fast Transients-Burst	EN61000-4-4		Level 3		
Input Line Surges	EN61000-4-5		Level 3		
Conducted Immunity	EN61000-4-6		Level 3		
Voltage Dips	EN61000-4-11, SEMI F47 compliant. See note 7.		Compliant		

ENVIRONMENTAL

Parameter	Conditions/Description	Min	Nom	Max	Units
Operating Temperature	Full Load	-20		+70	°C
Storage Temperature		-40		+85	°C
Derating	See Section 4.11 for full temperature deratings				
Relative Humidity	Non-condensing	5		95	%RH
Shock	3000 Bumps, 10G (16ms) half sine				
Vibration	1.5G	10		200	Hz

NOTES

1. This product is not intended for use as a stand alone unit and must be installed by qualified personnel.
2. The specifications contained herein are believed to be correct at time of publication and are subject to change without notice.
3. All specifications at nominal input, full load, 25°C unless otherwise stated.
4. When powering inductive or capacitive loads, it is recommended to use a blocking diode on the output.
5. Conformal Coating option: See Sections 3.1 and 4.10 for details.
6. For section references above go to the Xgen Designers Manual.
7. SEMI F47 compliant at input voltages >160VAC. Consult Excelsys for details.

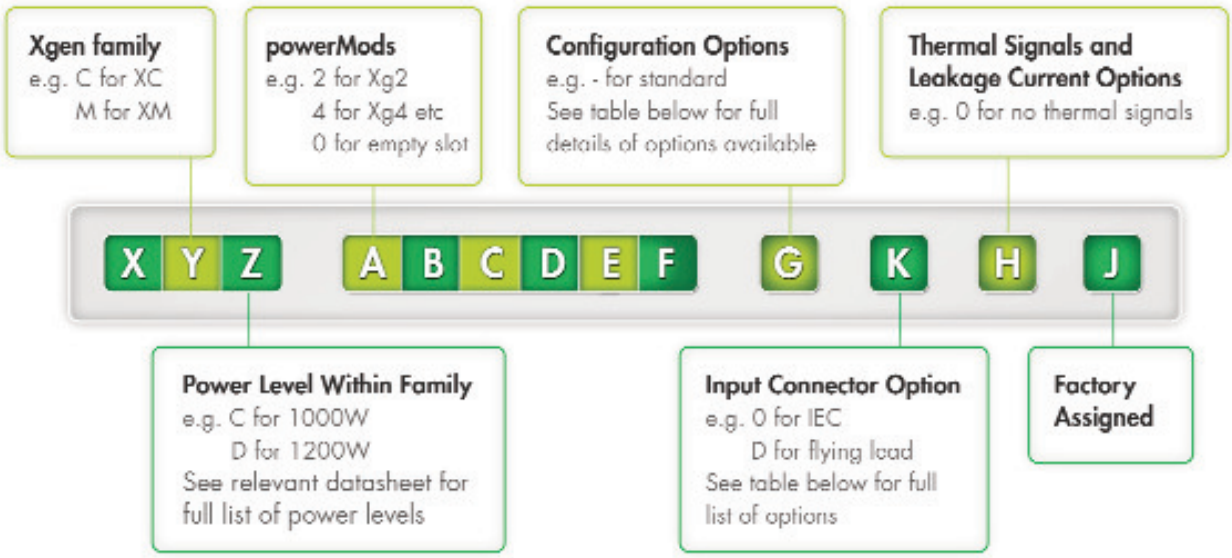

Section 3.1

Configuring your Xgen

The Xgen series of user configurable power supplies combine feature rich AC input front-ends *(powerPacs)* with slide-in output DC output modules *(powerMods)*. The plug and play architecture allows system designers to define and build 'instant' custom power solutions with industry leading 17W/in^3 power density and up to 90% efficiency.

Configured units may be specified and ordered using the part numbering system shown below.

OPTION CODES EXPLAINED

G CONFIGURATION CODES

"-" Standard. No additional configuration
Standard output voltages and no options

"C" Conformal Coating
(see Section 4.10 *powerPac* Options for details)

"P" Preset. Voltage Adjustments, Series, Parallel Outputs

"R" Extra Ruggedisation for Shock and Vibration
(see Section 4.10 *powerPac* Options for details)

"S" Conformal Coating and Extra Ruggedisation for Shock and Vibration (see Section 4.10 *powerPac* Options for details)

K INPUT CONNECTOR CONFIGURATION CODES

"0" Standard IEC Input Connector (see Section 3.3 for details)

"D" Input Cable Option (see Section 3.3 for details)

H THERMAL AND LEAKAGE CURRENT CONFIGURATION CODES

"1" Thermal Signals: Fan Fail and Overtemperature Warning
(see Section 4.10 *powerPac* Options for details)

"2" Reverse Fan
(see Section 4.10 *powerPac* Options for details)

"3" Thermal Signals + Reverse Fan
(see Section 4.10 *powerPac* Options for details)

"4" 150µA Leakage Current (medical versions only)

"5" 150µA Leakage Current + Thermal Signals
(medical versions only)

"6" 150µA Leakage Current + Reverse Fan
(medical versions only)

"7" 150µA Leakage Current + Thermal Signals + Reverse Fan (medical versions only)

Example:

XVD234580-D4A contains

XVD *powerPac*: 1200W medically approved

Powermods Xg2:5V/40A, Xg3:12V/20A, Xg4:24V/10A, Xg5:48V/6A, Xg8:24V/3A, 24V/3A

Option D : Input cable option

Option 4: 150µA leakage current option

A: Factory assigned unique identifier

Section 3.2

Additional Xgen Flexibility and Signals

Voltage Adjustment - Local

The multi-turn potentiometer that adjusts each output within the specified range may be accessed via the output panel of the power supply. Clockwise rotation increases output voltage. Resolution is approximately 5% of nominal voltage (Vnom) per turn.

Voltage Adjustment - Remote (resistive / electronic)

The output voltage may be adjusted or trimmed by means of an external resistor or potentiometer network connected to the Vtrim pin. Dynamic voltage adjustment/programming is also possible. See Section 4.6 for more details on trimming voltage.

Parallel Connection

To achieve increased current capacity, simply parallel outputs using the standard parallel links. See Section 4.6 for parallel connection instructions.

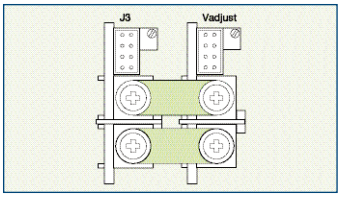

Parallel Links available to order.
Part Number XP1

Series Connection

To achieve increased output voltages, simply series outputs using standard series links, paying attention to the requirements to maintain SELV levels if required in your system.

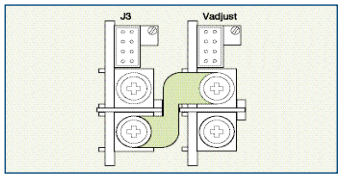

Series Links available. Part Number XS1

Current Limit Adjustment

The output current limit setting may be adjusted (downwards only) by means of an external resistor connection to the Itrim pin. See page Section 4.6 for detail.

Inhibit/Enable

Inhibiting may be implemented either globally or on a per-module basis (*powerPac* or *powerMod* inhibiting). Reverse logic (enabling) may also be implemented. See Section 4.7 and 4.9 for details.

AC Fail

Open collector signal indicating that the input voltage has failed or is less than 80Vac. This signal changes state giving 5ms of warning before loss of output regulation. See Section 4.9 for details.

Configure using the Online Configurator

Our sales and applications team will be delighted to assist you in defining the best power supply for your application. You can also use the Online Configurator at **www.excelsys.com**

For some specific configurator examples please refer to Section 3.5, Configuration Examples.

Section 3.3
Connectors

Input Connectors

The Xgen series has a variety of input connector options to ease system integration. These include IEC, Input cables (3wire), IEC to Screw Adaptor.

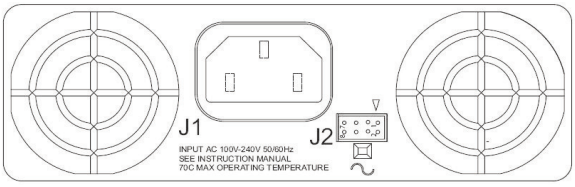

Input Connections *powerPac*
Input Connector and Signals Pinout J2 *powerPac*

Pin	J1	J2
1	Line	Common
2	Neutral	+5V Bias
3	Earth	not used
4		AC Fail
5		Fan Fail *
6		Global Enable
7		Temp Alarm*
8		Global Inhibit

* Option 01

J1 Mating Connector:
IEC320 type female plug rated 13A. Locking IEC cable and connector: Schaffner EMC part number IL13-US1-SVT-3100-183.

J2 Signals Mating Connector:
Housing: Molex p/n 51110-0850 (Non Locking), 51110-0860

Input Cable Option (Option D)

Xgen is also available with an input cable connection option allowing greater flexibility when mounting Xgen in the system. Input cables are 300mm in length and come supplied with Faston connectors. See Section 3.4 for mechanical drawings.

IEC to Screw Terminal Adaptor

Some applications may require a screw terminal input rather than the standard IEC320 connector provided with the Xgen (except XCE and XLD). For such applications, Excelsys can offer the XE1, the IEC to Screw terminal adaptor accessory plug. This is a press fit connector that plugs securely into the Xgen *powerPac* and provides the system integrator with screw terminals for mains connection. See photos for correct insertion of XE1.

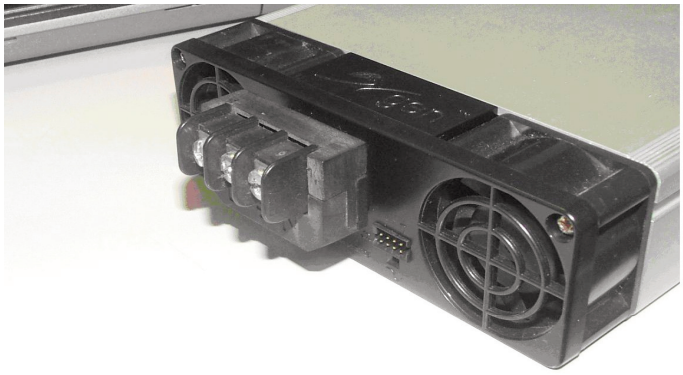

Dimensional Drawings

Correct pin positions are indented to assist connection. Pins are indented to indicate the correct connection

1. Live (L)
2. Earth Centre (Earth)
3. Neutral (N)
4. Screw size M3

Max Torque to be used on screws is 1.5Nm

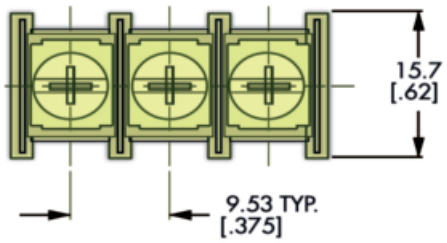

For applications where spade terminal inputs are required, Excelsys recommend the use of the Schurter IEC Appliance plug 4787.

Lockable IEC Power Cord

Excelsys recommends that a lockable IEC power cord is used in applications that are subject to vibration. Excelsys recommends the use of Schaffner IL13 or equivalent.

Output Connectors

The Xgen output *powerMods* connection details are shown below. Type A connectors are for single output *powerMods* Xg1 to Xg7. Type B connector for Dual output Xg8 *powerMod*.

The pinout connections and diagrams of the Xgen power and signal connectors are as follows

TYPE A Xg1-Xg7

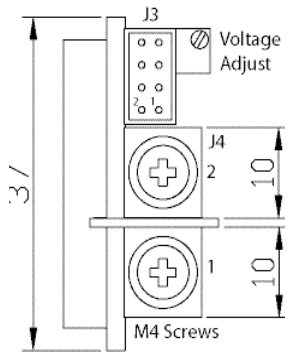

J4 Connector : M4 Screw

J3 Connector Mating Connector
Housing: Locking Molex 51110-0860
Non Locking Molex 51110-0850
Crimp Termnal: Molex p/n 50394

TYPE B : Xg8

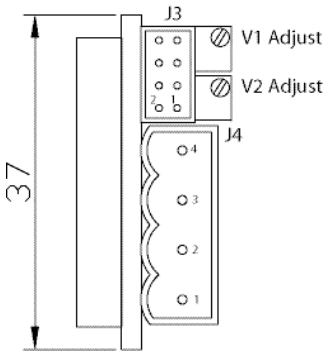

J4Connector : Camden 9200/4A

J3 Connector Mating Connector
Housing: Locking Molex 51110-0860
Non Locking Molex 51110-0850
Crimp Termnal: Molex p/n 50394

Output Connector Pinout

Pin	J4 (type A)	J4 (type B)
1	-Vout	-V2
2	+Vout	+V2
3		-V1
4		+V1

J4 Mating Connectors:
Type A: M4 Screw Terminals
Type B: Camden p/n CTB9200/4A

Output Signals Connector Pinout

Pin	J2 *(powerPac)*	J3 *(powerMod)* Xg1-Xg5 Type A	J3 *(powerMod)* Xg7 Type A	J3 *(powerMod)* Xg8 Type B
1	common	+sense	not used	-pg (V2)
2	+5V bias	-sense	not used	+pg (V2)
3		V trim	not used	inhibit (V2)
4	ac fail	I trim	common	common (V2)
5	fan fail*	+inhibit/enable	-pg	-pg (V1)
6	global enable	-inhibit/enable	+pg	+pg (V1)
7	temp alarm*	+power good	inhibit	inhibit (V1)
8	global inhibit	-power good	common	common (V1)

*Option 01 only

J3 *powerMod* Signals Mating Connector:
Housing: Molex p/n 51110-0850 (Non Locking), 51110-0860 (Locking) or equivalent
Crimp Terminal: Molex p/n 50394
(Locking) or equivalent
Crimp Terminal: Molex p/n 50394

Section 3.4
Mechanical Drawings

XL, XM, XK, XR, XT, XN (except XLD and XMD)

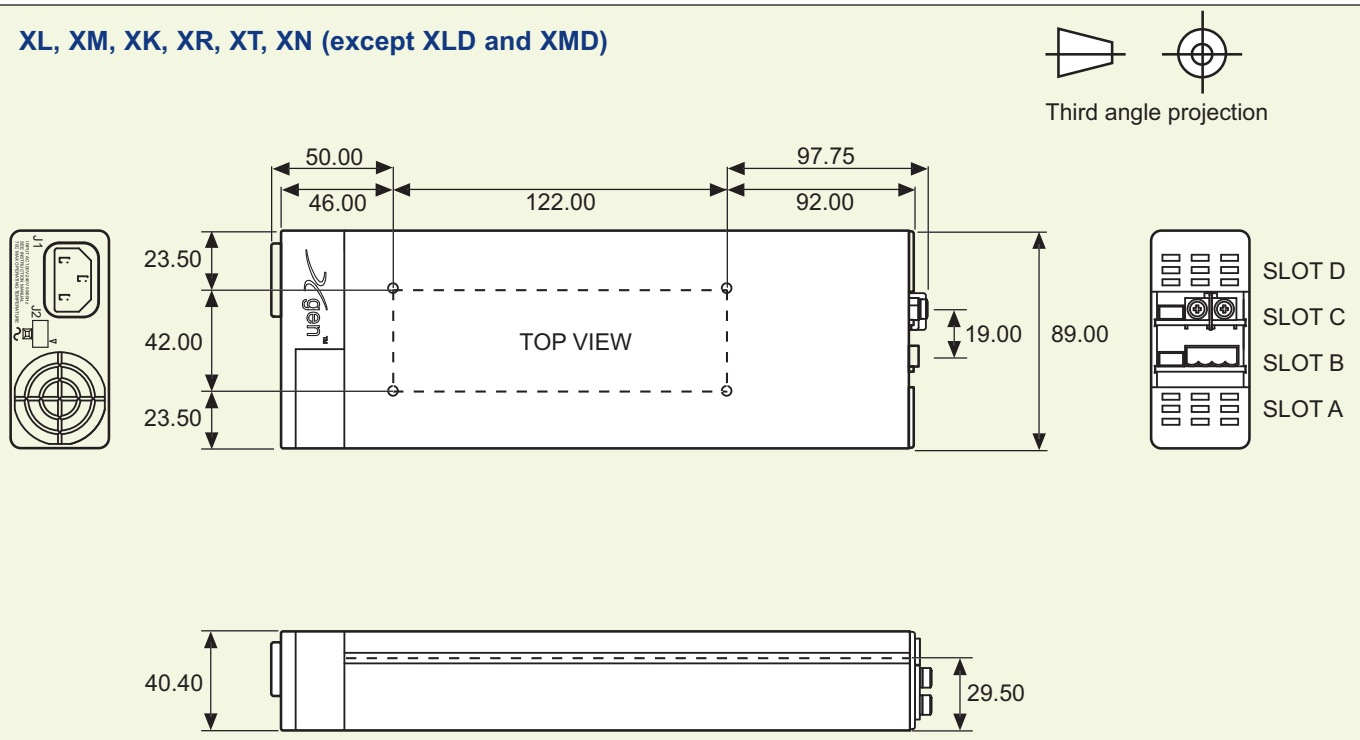

All dimensions in mm.

Mounting Holes
4 M4 threaded holes on Base. Max screw penetration is 6mm from Base.

Fleximount Side Mounting Slots
Use with self-clinching studs type FH-M4-X or FH-832-X (X= stud length) from PEM, or equivalent
Alternatively, use Xgen Side Clamps from Excelsys. Part No. Z165 (drawing 61401)

XLD, XMD

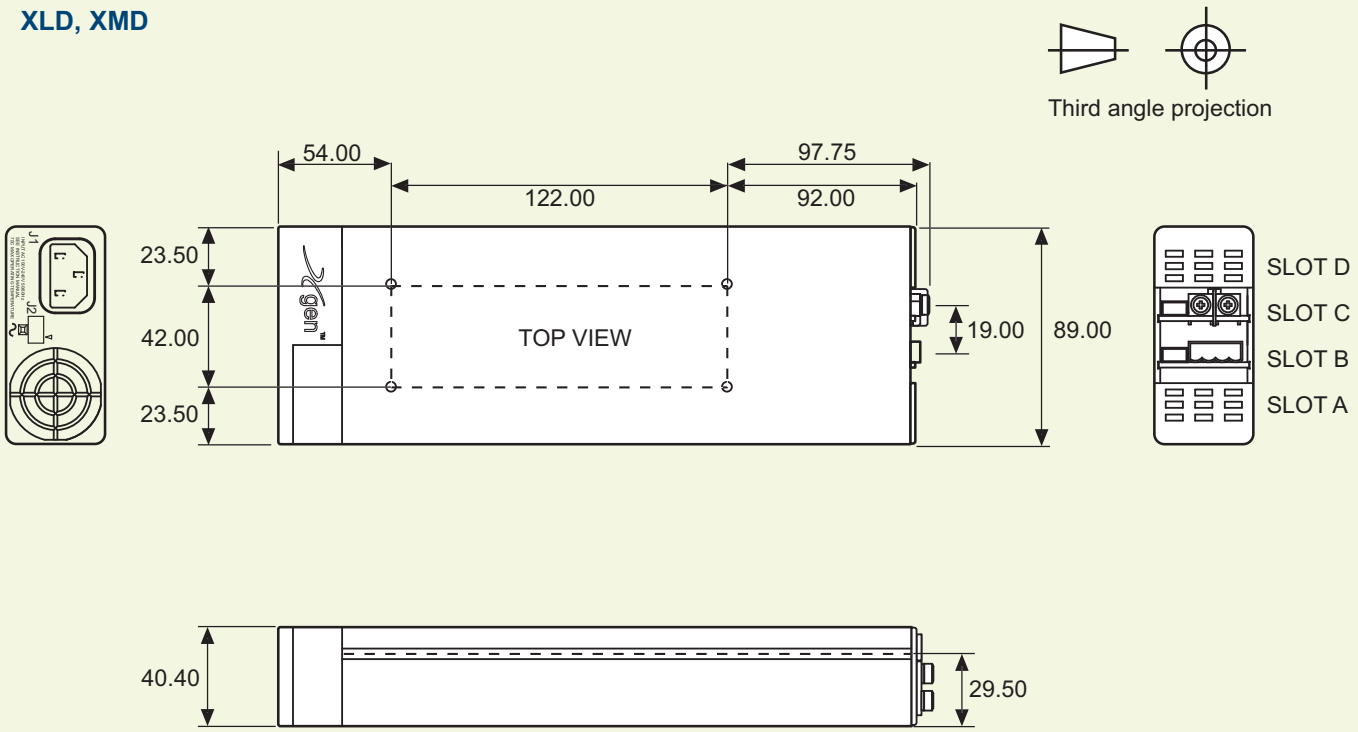

All dimensions in mm.

Mounting Holes
4 M4 threaded holes on Base. Max screw penetration is 6mm from Base.

Fleximount Side Mounting Slots
Use with self-clinching studs type FH-M4-X or FH-832-X (X= stud length) from PEM, or equivalent
Alternatively, use Xgen Side Clamps from Excelsys. Part No. Z165 (drawing 61401)

XC, XV, XQ, XZ, XB, XW, XH (except XCE and XVE)

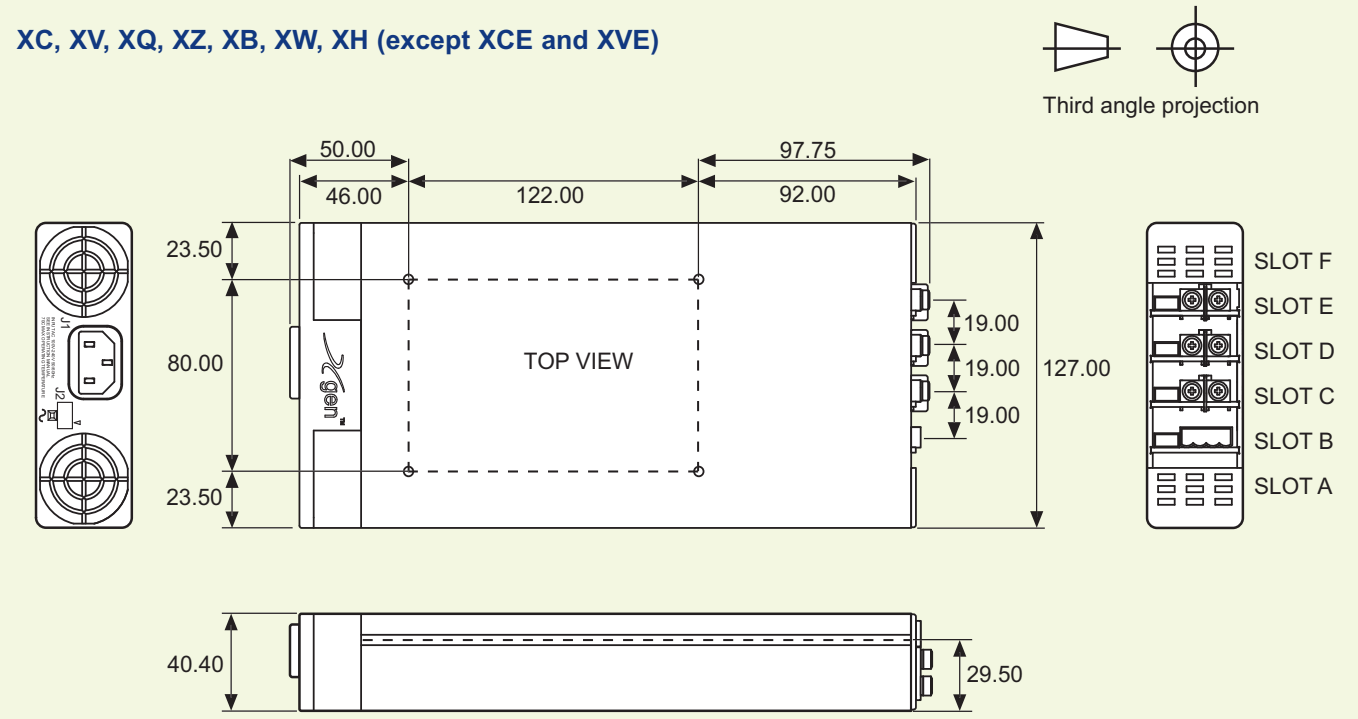

All dimensions in mm.

Mounting Holes
4 M4 threaded holes on Base. Max screw penetration is 6mm from Base.

Fleximount Side Mounting Slots
Use with self-clinching studs type FH-M4-X or FH-832-X (X= stud length) from PEM, or equivalent
Alternatively, use Xgen Side Clamps from Excelsys. Part No. Z165 (drawing 61401)

XCE, XVE

Third angle projection

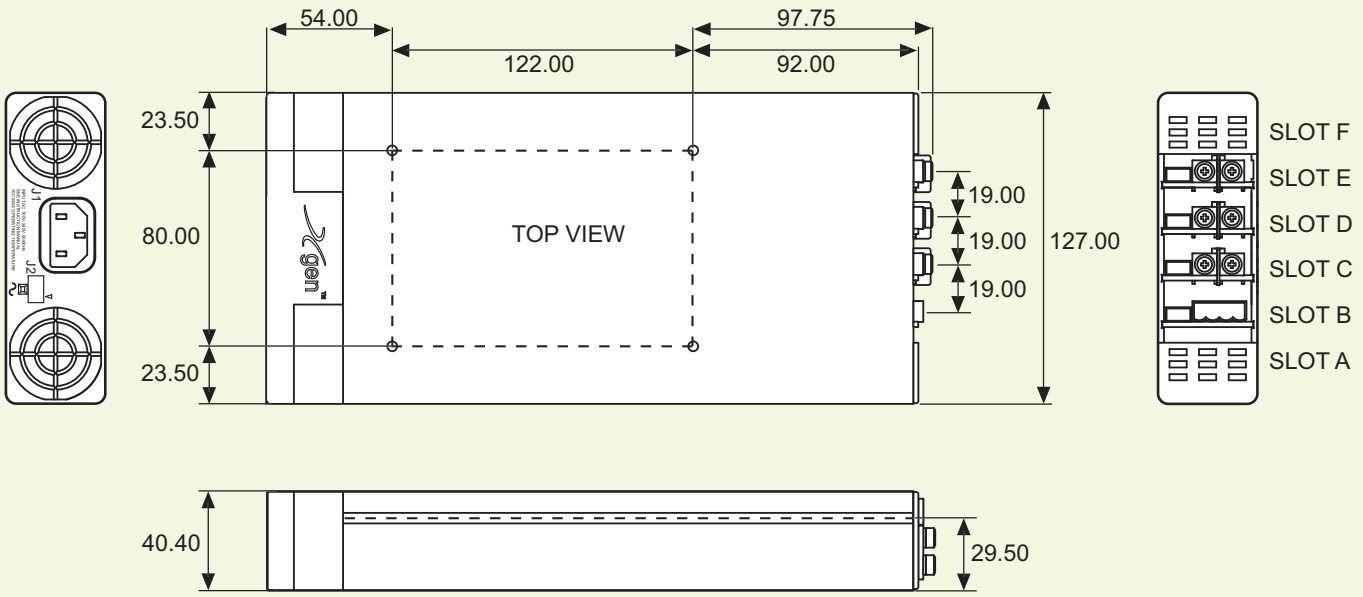

All dimensions in mm.

Mounting Holes
4 M4 threaded holes on Base. Max screw penetration is 6mm from Base.

Fleximount Side Mounting Slots
Use with self-clinching studs type FH-M4-X or FH-832-X (X= stud length) from PEM, or equivalent
Alternatively, use Xgen Side Clamps from Excelsys. Part No. Z165 (drawing 61401)

4 slot Input Cable Version (Option D)

Standard cable length 300mm, please contact factory for alternative lengths

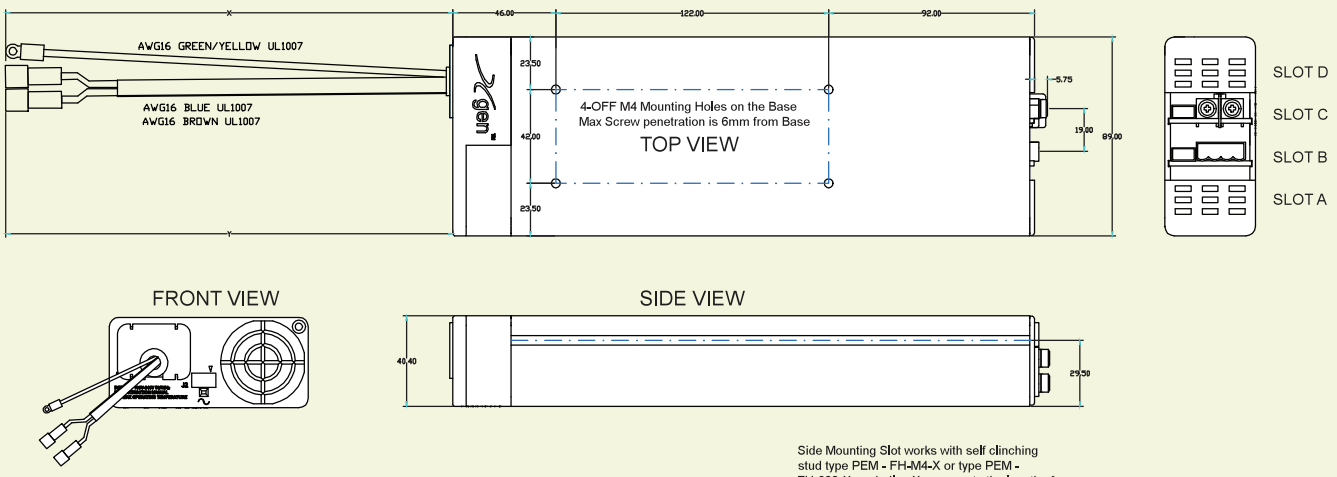

Side Mounting Slot works with self clinching stud type PEM - FH-M4-X or type PEM - FH-832-X or similar. X represents the length of the stud.
Alternatively, the Side Mounting Slots may be used with Excelsys Side Clamps (Drawing no. 61401)

6 slot Input Cable Version (Option D)

Standard cable length 300mm, please contact factory for alternative lengths

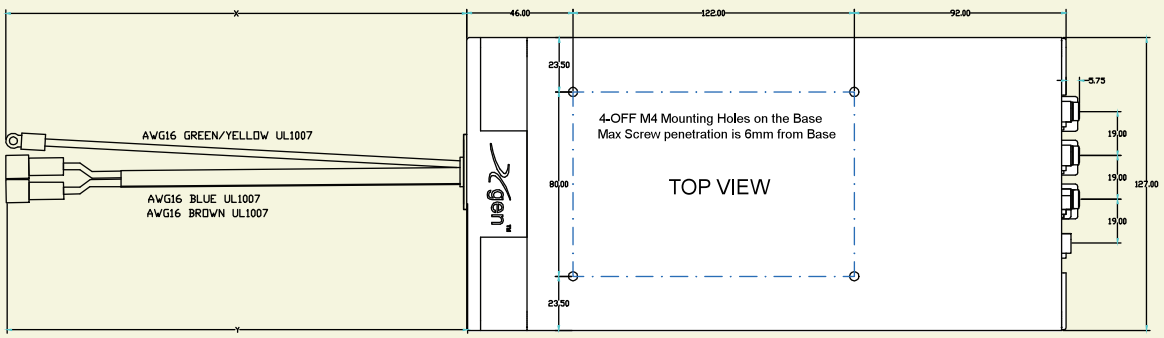

FRONT VIEW

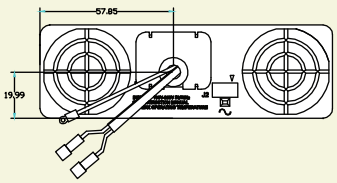

SIDE VIEW

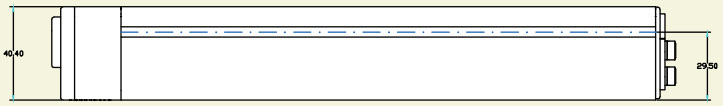

Side Mounting Slot works with self clinching stud type PEM - FH-M4-X or type PEM - FH-832-X or similar. X represents the length of the stud,
Alternatively, the Side Mounting Slots may be used with Excelsys Side Clamps (Drawing no. 61401)

Xgen Mounting Options

To ease system integration there are three methods of mounting the Xgen in a system.

1. Base Plate Mounting

The unit can be mounted in the system via the mounting holes present on the Xgen base. See mechanical drawings for mounting hole positions. Use M4 mounting screws. Ensure that maximum screw penetration from base does not exceed 6mm.

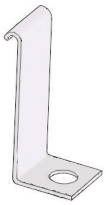

2. Fleximount System A

Using the side mounting clips accessory shown. the clip can be positioned at the user defined position along the slide rail on the side of the Xgen. The clip is then mounted to the system base plate. Use M4 mounting screws to fix mounting clip to system base. Excelsys part number Z165.

3. Fleximount System B

Using the slide rail on side of the Xgen, self clenching studs can be placed at a user defined position. Recommend: PEM FH-M4-X or FH-832-X or equivalent.

Section 3.5

Configuration Examples

When configuring your Xgen, it is important to observe the power ratings of individual *powerMods* and *powerPacs* in order to ensure the best performance of the Xgen in the system. Operating ambient temperature around the power supply and input voltage can impact the performance of a power supply in a system. The examples set out below illustrate the flexibility of the Xgen for many applications, whilst also providing the optimum solution for system designers. Our sales and applications team will be delighted to assist you in defining the best power supply for your application. You can also use the Online Configurator at www.excelsys.com

	Output 1	Output 2	Output 3	Output 4	Output 5
Volts	24V	12V	5V	15V	-15V
Amps	25A	12A	4A	2A	2A

Example 1

Max Ambient Temp: 25°C
Input Voltage: 90-264VAC
Medically Approved (EN60601-1)

I. Select *powerMods*

Output 1: 24V@25A	3 x Xg4 connected in parallel
Output 2: 12V@12A	Xg3
Output 3: 5V@4A	Xg7
Output 4: 15V@2A	V1 of Xg8, Adjust to 15V
Output 5: -15V@2A	V2 of Xg8,. Adjust to 15V

II. Calculate the power required

Power = Volt x Current
Output 1: 600W
Output 2: 144W
Output 3: 20W
Output 4: 30W
Output 5: 30W Total: 824W

III. Select *powerPac*

824W at 90VAC in at 25°C, and carry medical approvals
XVC: 1000W medically approved *powerPac* (XV) delivers 850W at 85VAC.
Refer to *powerPac* derating curves Section 4.11.

IV. Select *powerMod* slot position

Refer to *powerMod* derating curve Section 4.11.
At 25°C all *powerMods* can be configured in any slot position.

V. Define part number

All *powerMods* are within their ratings in all slot positions.
XVC444780

	Output 1	Output 2	Output 3	Output 4	Output 5
Volts	24V	5V	12V	24V	18V
Amps	15A	30A	15A	1.5A	1.5A

Example 2

Max Ambient Temp: 40°C
Input Voltage: 90-264VAC
Low Acoustic Noise
Standard Safety Approvals (EN60950)

I. Select *powerMods*

Output 1: 24V@15A	2 x Xg4 connected in parallel
Output 2: 5V@30A	Xg2
Output 3: 12V@15A	Xg3
Output 4: 24V@1.5A	V1 of Xg8,
Output 5: 18V@1.5A	V2 of Xg8,. Adjust to 18V

II. Calculate the power required

Power = Volt x Current
Output 1: 360W
Output 2: 150W
Output 3: 180W
Output 4: 36W
Output 5: 29W Total: 756W

III. Select *powerPac*

756W at 90VAC in at 40°C, and low noise
XQB: 900W low noise *powerPac* (XQ) delivers 850W at 85VAC
Refer to *powerPac* derating curves Section 4.11.

IV. Select *powerMod* slot position

Refer to *powerMod* derating curve Section 4.11.
At 40°C, Xg4 delivers 240W in all slot positions.
At 40°C Xg2 delivers 167W in slot A, 160W Slot B, 200W in Slots C, D, E and F.
At 40°C, Xg3 delivers 240W in all slot positions.
powerMods can be configured in any slot position.
At 40°C, Xg8 delivers 80W in slot B, 96W in Slots A,C,D,E,F

V. Define part number

All *powerMods* are within their ratings in all slot positions
XQB234480-00

	Output 1	Output 2	Output 3	Output 4	Output 5
Volts	24V	12V	3.3V	12V	12V
Amps	60A	30A	30A	8A	8A

Example 3

Max Ambient Temp: 40°C
Input Voltage: 200-240VAC

Standard Approvals: (EN60950)

I. Select *powerMods*

Output 1: 24V@60A	6 x Xg4 connected in parallel
Output 2: 12V@30A	2 x Xg3 connected in parallel
Output 3: 3.3V@30A	Xg2, Adjust to 3.3V
Output 4: 12V@8A	Xg3
Output 5: 12V@8A	Xg3

II. Calculate the power required

Power = Volt x Current
Output 1: 1440W
Output 2: 360W
Output 3: 99W
Output 4: 96W
Output 5: 96W Total: 2091W

III. Select *powerPac*

2091W at 200VAC in at 40°C, and carry standard approvals
XCD: 1200W *powerPac* (XC) delivers 1200W at 200VAC.
Refer to *powerPac* derating curves Section 4.11.
Requires an XCD and XCC *powerPac* to achieve 2091W.

IV. Select *powerMod* slot position

Refer to *powerMod* derating curve Section 4.11.
At 40°C, Xg4 delivers 240W in all slot positions.
At 40°C, Xg3 delivers 240W in all slot positions.
powerMods can be configured in any slot position.
At 40°C Xg2 delivers 167W in slot A, 160W Slot B, 200W in Slots C, D, E and F.

V. Define part number

All *powerMods* are within their ratings in all slot positions.
Divide the power consumption over the two *powerPacs* ensuring that no *powerPac* exceed its power rating.

XCC233444 to deliver 3.3V@30A, 12V@30A, 24V@30A
XCC444330 to deliver 24V@30A, 12V@8, 12V@8A

Parallel connect modules over two *powerPacs* using the same method as outlined in Section 4.6.

Xgen

DESIGNERS' MANUAL

This Xgen Designers' Manual has been prepared by Excelsys experts to assist qualified engineers and technicians in understanding the correct system design practices necessary to achieve maximum versatility and performance from any of the Xgen series family of products.

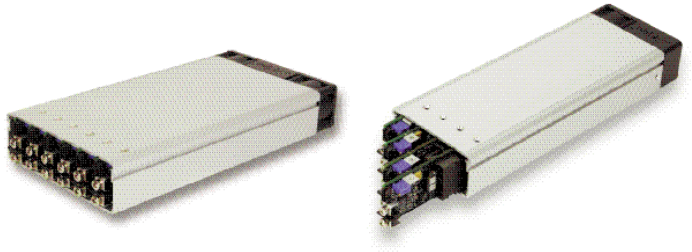

Section 4.1
Overview of Xgen Series

The Xgen series allows users to instantly configure high efficiency, off-line power supplies. Although very small in size, (40.4mm high, 260mm long and either 89mm or 127mm wide) the Xgen series provides up to 1340W of output power. The chassis has 4 or 6 slots and can provide up to 12 isolated outputs.

A complete power supply is configured by selecting and inserting up to six DC output modules called *powerMods* to build a power supply that offers the advantages of a custom supply, but is assembled from standard and modular building blocks continuing the Excelsys tradition of industry leading configurable power supplies.

Manufactured in world class power supply facilities, the Xgen series is completely user configurable. If output requirements change, i.e. more power or a different output voltage is needed, upgrading is easy: simply unlock a single screw and replace the slide-in *powerMod* assembly with the preferred alternative. Allowing additional flexibility, *powerMods* can be connected in parallel to increase output power, or in series for higher voltages (subject to staying within isolation ratings and giving due consideration to any SELV requirements).

A user-friendly interface on connector J3 of each *powerMod* provides control and output sequencing capability, in addition to useful status indicators. Please consult our Excelsys applications team if you have other special requirements.

The plug-together architecture facilitates 'instant' custom power solutions with industry leading 17W/in^3 power density and up to 90% conversion efficiency. Available in two package sizes, with a variety of application specific *powerPacs*, the Xgen series provides a standard off-the-shelf solution for specific application requirements.

Standard Features
- Input Voltage: 85V to 264Vac 47 to 63 Hz
- Outputs: Up to 12 isolated outputs
- Full power output to 40°C; Derating to 70°C
- Low inrush current
- Conducted EMI meets EN 55022 Level B
- AC Fail status signal
- Output sequencing capability
- Global shutdown capability
- Overcurrent protection standard on all outputs.
- Overvoltage protection on all outputs
- Over temperature limiting on all *powerMods* and *PowerPacs*
- Safety Agency Approvals: CE Mark, UL, CSA
- DC OK (Power Good) status signal
- Wide output voltage adjustment range
- RoHS compliant

Optional Features
- Thermal signals suite (Overtemp and FanFail signals)
- Reversed fan airflow direction
- Conformal coating
- Ultra low leakage current
- Ruggedised for extreme shock and vibration
- Alternative input connectors

Section 4.2
Installation Considerations

Xgen series models may be mounted on any of three surfaces using standard M4 screws. The chassis comes with four mounting points on the base. Maximum allowable torque is 2Nm. The maximum penetration depth is 6mm. Additionally, the fleximount™ system on both side walls of the *powerPac* chassis facilitates flexible mounting.

When selecting a mounting location and orientation, the unit should be positioned so air flow is not restricted. Maintain a 50mm minimum clearance at both ends of the Xgen power supply and route all cables so airflow is not obstructed. The standard unit draws air in on the input side and exhausts air out the load side. If airflow ducting is used, avoid sharp turns that could create back pressure.

Avoid excessive bending of output power cables after they are connected to the Xgen *powerMod*s. For high current outputs, use cable-ties to support heavy cables and minimise mechanical stress on output studs. Be careful not to short-out to neighboring output studs. Xgen *powerMod*s are supplied with spring washers on all output screws. These (or equivalents) should be used and thread locking compounds are not required. The maximum torque recommended on output connectors is 4Nm. Avoid applications in which the unit is exposed to excessive shock or vibration levels that exceed the specified levels. In such applications, a shock absorption mounting design is required.

Section 4.3
Xgen Mounting Considerations

- Always fill all output slots of the Xgen. If a slot is not filled with a *powerMod*, it should be filled with an Empty Slot Cover (part numbers XB1, XB2 or XB3). Empty Slot covers are plastic assemblies whose main function is to fill up an empty slot. Excessive airflow escape from an empty slot may degrade thermal performance and result in overheating and damage to the Xgen unit. Refer to Section 4.11 for optimum positioning of *powerMods*.
- Do not unplug *powerMod*s while input power is applied to the *powerPac*. The Xgen series is not designed for hot-plug applications.
- Do not restrict airflow to the unit. The cooling fan draws air into the unit and forces it out at the output terminals.

- Always ensure that output screws are properly torqued before applying power to the *powerPac*.
- Positive and negative power cables should be arranged as a twisted pair to minimise inductance.
- Wait 4 minutes after shutting off power before inserting or removing *powerMod*s.
- Xgen assemblies do not have user serviceable components. They must be returned to the factory for repairs. Contact Customer Service for a RMA number before returning the unit. Do not attempt to repair or modify the power supply in any manner other than the exchange of *powerMod*s as described in this Designers' Manual.
- Use proper size wires to avoid overheating and excessive voltage drop.

Section 4.4
Theory of Operation

The Xgen is comprised of an appropriate *powerPac* and a selection of *powerMod* DC output modules selected to deliver the exact volts and amps requirements of the the system designer. See Operational Block Diagram.

The Xgen *powerPac* modules consist of a fan-cooled semi-enclosed chassis containing circuitry for an off-line single phase AC front end, EMI filter, cooling fan, customer interface and associated housekeeping circuits. Input AC mains voltage (L1/N, L2 and GND) is applied to an IEC320 type input connector and then through an EMI filter designed to meet EN 55022 Level B. For medical applications, the EMI filter also ensures the power supply meets the low earth leakage current requirements of EN60601-1 3rd Edition.

Inrush current limited by an active soft start cct. Current is limited by a combination of thermistors (on the Xgen 4 slot), and thermistors and SCR's (on the Xgen 6 slot). This stage is then followed by a high frequency switching input current shaping boost converter feeding the ZVS (Zero Voltage Switching) resonant switching stage. The ZVS stage supplies power to a variety of *powerMod* assemblies that provide the desired low voltage, regulated outputs. Conversion in the output assemblies is achieved by the most advanced high efficiency converters resulting in reduced size for magnetics and capacitors; excellent line and load regulation; wide adjustment range for output and low EMI/RFI emission.

At initial power-up, the Xgen outputs are disabled to eliminate inrush current and a low-power flyback converter operating with PWM current mode control converts the high voltage DC bus into regulated low voltage to power the internal housekeeping circuits and cooling fans. Once the bus potential is within operating parameters, the AC Fail signal is activated indicating that the input power is ok, and allows the installed *powerMod* outputs to come up. An auxiliary bias supply of 5 Vdc is provided for peripheral use on interface connector J2. In the case of medically approved supplies, this bias supply has medical isolation (4000VAC).

Section 4.5
Configuration (and Reconfiguration)

powerMods may be easily added, replaced, or moved by sliding the assemblies in or out of a *powerPac* chassis.

Prior to removing or installing a *powerMod* module, remove power from the *powerPac* and wait 4 minutes. Failure to do so can result in personal injury and/or damage to the supply. Take standard ESD precautions when handling *powerMods*.

Configuring the Xgen is as easy as 1,2,3!

1. Select the appropriate *powerMods* for your application.
2. Calculate your power requirements.
3. Select your appropriate *powerPac* for power and application from the wide range of *powerPacs*.

Removing *powerMods*

powerMods may be removed by removing the screw on the top surface. Once this screw has been removed the *powerMod* will slide out of the chassis. Once a *powerMod* has been removed, the empty slot MUST be filled with either another *powerMod* or an empty slot cover. If the slot is left empty, it will provide an airflow escape and may cause inadvertent shutdown of the unit.

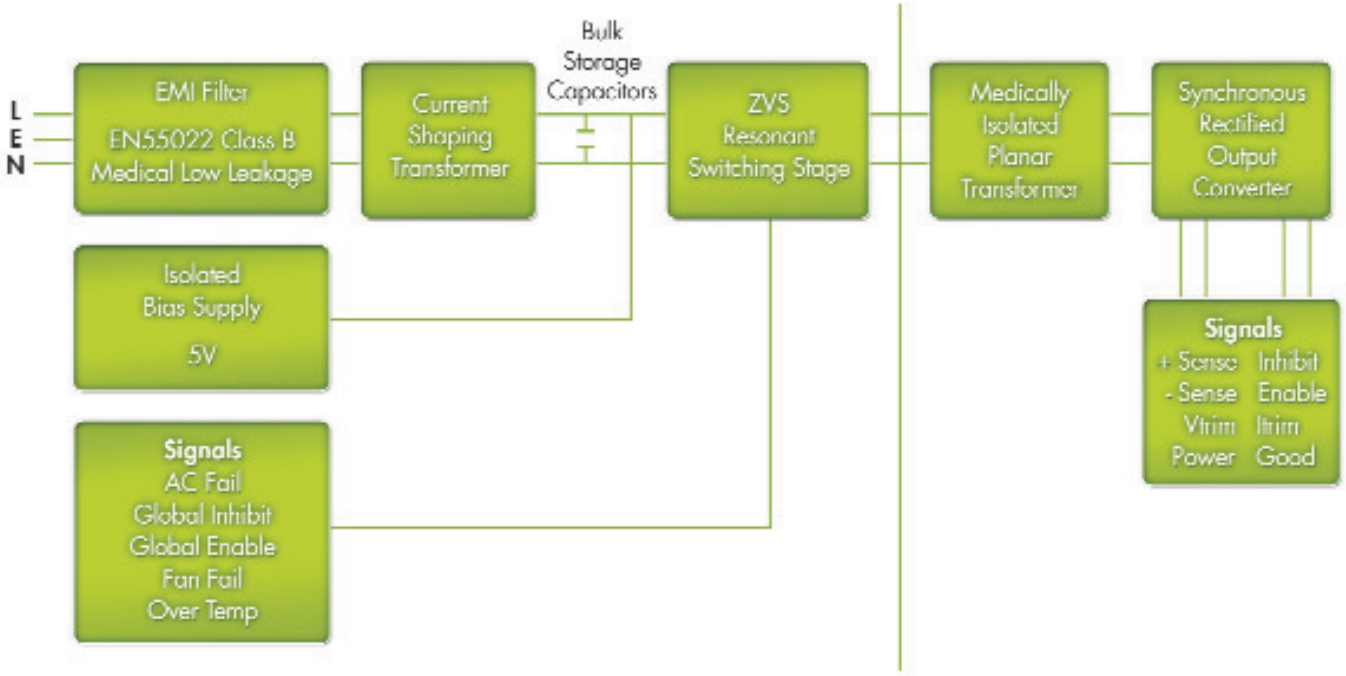

Operational Block Diagram

Installing *powerMods*

powerMods may be installed in empty slots by simply sliding in the new *powerMod*, pushing the module 'home' until the mounting bracket lines up with the hole in the Top Panel, then securing the module with the M3 x 6 countersunk screw provided. Power and interface connections can be made after the *powerMod* has been installed.

powerMods may be paralleled for more power using bus bars (Paralleling Links) across the positive and negative output terminals. See Section 4.6 for details.

Section 4.6

powerMod Operation

The Xgen series of products have been designed to allow maximum flexibility in meeting the unique requirements of individual users. The inherent flexibility resulting from modularity concepts is further enhanced by this flexibility. Although the products are very versatile, care should always be taken to ensure that the proper procedures are followed.

Voltage Adjustment

The Xgen series has been designed with maximum user flexibility as a key objective. With regards to voltage adjustment this has been achieved by the wide range of adjustment on each of the *powerMod* models. Voltage adjustment may be achieved by:

1. Front-panel potentiometer adjustment
2. Remote resistive programming
3. Remote voltage programming

See diagrams for details on external connections to the V trim pin (J3 pin3) required for remote voltage programming.

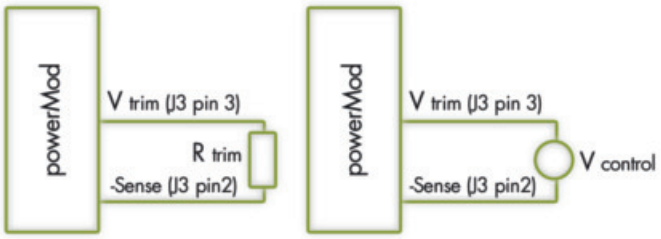

Remote Output Voltage Adjustment of powerMods

Remote Voltage Programming using a Voltage Source

Using an external Voltage source ($V_{control}$), the *powerMod* output voltage may be adjusted over a wide range. The *powerMod* output voltage may be programmed by referring to the Voltage Programming Graph and applying the formula below to set the *powerMod* output voltage to the required level.

$$V_{output} = K \times V_{control} \qquad (1)$$

The appropriate K factor for different *powerMods* are in the 'Remote Output Voltage Adjustment' table.

Important: $V_{control}$ must not exceed 2.5V.

Example.
Using a *powerMod* Xg4, what external voltage must be applied to Vtrim pin in order to set *powerMod* output voltage to 20V.

V_{output} = 20V, K=12.5
Using equation (1); $V_{output}/K=V_{control}$
20V/12.5 = 1.6V.

$$V_{control} = 1.6V$$

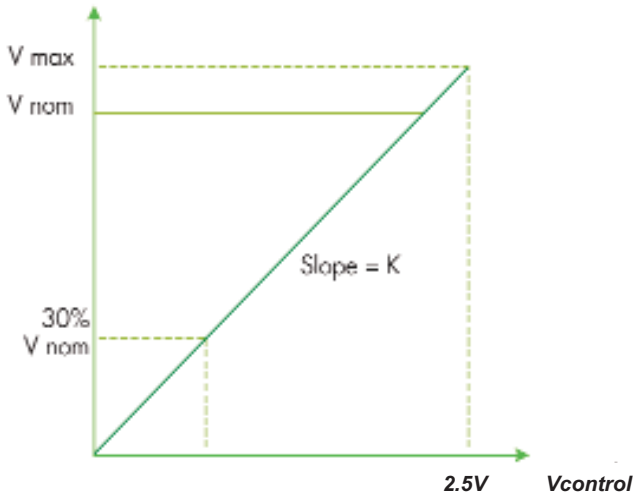

Remote Output Voltage Adjustment of powerMods

powerMod	K
Xg1	1.56
Xg2	2.5
Xg3	6.23
Xg4	12.5
Xg5	24.2

Remote Output Voltage Adjustment Table

Remote Voltage Programming using a Resistor.

The *powerMod* output voltage can be adjusted downward using a remote potentiometer or reduced, using an external resistance.

Calculation of the the external resistance depends on the actual initial voltage setting of the *powerMod* (via the onboard potentiometer). The preferred method is to set the *powerMod* voltage to its maximum rating. e.g. Xg4 set to 30V. This will allow the widest possible adjustment range of the output voltage.

powerMod set to V_{max}

$$R_{trim} = \frac{[3700V_{out} - 250K]}{[2.5K - V_{out}]} \qquad (2)$$

Example.
Using a *powerMod* Xg4, determine the resistance value to be applied to V_{trim} pin in order to set *powerMod* output voltage to 20V.

K for Xg4 = 12.5
Vout = 20V
Using equation (2)

$$R_{trim} = 6300 \text{ ohm}$$

Alternatively if the *powerMod* voltage is set to new level via the on-board potentiometer to another level e.g. 21V then the following formula must be used to calculate the value of R_{trim}

$$R_{trim} = 1000V_{out}\frac{[(4.275 + Vp(1.96 - 4Vp)] - K(0.1Vp + 0.051)}{K(Vp + 0.51) - 0.604V_{out}} \qquad (3)$$

powerMod	Vmin	Vnom	Vmax	Imax	Ilimit adjust Min Max	Current Limit On set SC*	Current Limit Foldback	Vtrim Range Min Max	Itrim Range Min Max	OVP1 Tracking % of Vset	OVP2 Latching % of Vmax	Remote Sense	J3 Signals	
Xg1	1.5V	2.5V	3.6V	50A	5A 55.0A	55.0A 58.0A	Yes	1.0V 3.6V	5A 50A	110-115%	110-125%	0.5V	+Sense Vtrim Inhibit +PG	-Sense Itrim Enable -PG
Xg2	3.2V	5.0V	6.0V	40A	4A 44.0A	44.0A 46.0A	Yes	1.0V 6.0V	4A 40A	110-115%	110-125%	0.5V	+Sense Vtrim Inhibit +PG	-Sense Itrim Enable -PG
Xg3	6.0V	12.0V	15.0V	20A	2A 22.0A	22.0A 23.0A	Yes	4.0V 15.0V	2A 20A	110-115%	110-125%	0.5V	+Sense Vtrim Inhibit +PG	-Sense Itrim Enable -PG
Xg4	12.0V	24.0V	30.0V	10A	1A 11.0A	11.0A 12.0A	Yes	8.0V 30.0V	1A 10A	110-115%	110-125%	0.5V	+Sense Vtrim Inhibit +PG	-Sense Itrim Enable -PG
Xg5	28.0V	48.0V	58.0V	6A	0.7A 6.66A	6.6A 7.0A	Yes	8.0V 58.0V	0.7A 6A	110-115%	110-125%	0.5V	+Sense Vtrim Inhibit +PG	-Sense Itrim Enable -PG
Xg7	5.0V	24.0V	30.0V	5A	No	5.5A 6.0A	No	No	No	No	110-125%	No	+PG -PG Inhibit Common	+PG
Xg8 *V1*	5.0V	24.0V	28.0	3A	No	3.3A 4.0A	No	No	No	No	110-125%	No	+PG -PG	+PG -PG
Xg8 *V2*	5.0V	24.0V	28.0	3A	No	3.3A 4.0A	No	No	No	No	110-125%	No	Inhibit Common	Inhibit Common

Output powerMod Summary Specifications

where Vp is the *powerMod* setpoint voltage expressed as a proportion of the total trim range and can be calculated using formula (4).

$$Vp = \frac{(Vset - 0.844K)}{1.656K} \qquad (4)$$

Example.
To set *powerMod* Xg4 to 15V when *powerMod* Vset is 21V.

K=12.5

Using equation (4) $Vp = \frac{Vset - 0.844K}{1.656K}$

$$= \frac{21 - 0.844(12.5)}{1.656K(12.5)}$$

$$Vp = 0.5048$$

Vout =15V

Using equation (3)

$$R_{trim} = \frac{1000V_{out}[(4.275+Vp(1.96-4Vp)] - K(0.1Vp+0.051)}{[K(Vp+0.051) - 604V_{out}]}$$

$$Rtrim = 17{,}212 \text{ ohm}$$

The power rating of the trim resistor can be as low as 100mW

Over Current Protection (OCP)

A variety of over current protection methods are possible with the Xgen series. See the 'Output *powerMod* Summary' table which indicates the available current limit modes on each *powerMod*. *powerMods* Xg1 to Xg5 can have Straight-line current limit or Foldback current limit. See 'Output *powerMod* Summary Specifications' table for nominal current limit values.

Simple external application circuits may be used to achieve programmable *foldback* current and *user programmable* current limit levels (reduced). See Current Limit Programming diagrams and Foldback Programmable Current Limit diagram. The default current limit characteristic is Straight Line Current Limit.

Programming Current Limit

The current limit can be programmed to your requirements (in both Straight line and Foldback modes).

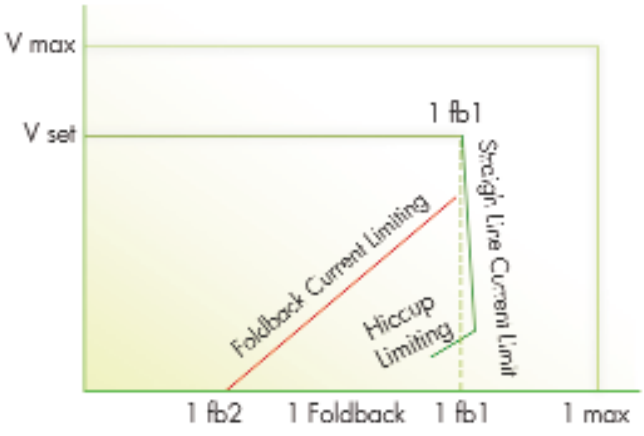

Current Limit Characteristics

Straight line Current Limit can be programmed using an external voltage source or resistor/potentiometer. Connection between the Itrim pin (J3 pin4 and the -Vout terminal will set the current limit to the desired level.

Straight Line Current Limit Using a Voltage Source

The formula below will calculate the required external control voltage required to set the current limit of a *powerMod*:

If Current Limit is Less than 85% of Maximum Current

$$I_{trim} = FI_{lim} + CF - 0.53 \qquad (5)$$

If Current Limit is Greater than 85% of Maximum Current:

$$I_{trim} = \frac{FI_{lim} + CF - 1.325}{0.558} \qquad (6)$$

Where F is a conversion factor for each powerMod and CF is a correction factor.

Example:
To set the current limit of Xg2 to 20A, determine the external voltage to be applied to the I_{trim} pin.

I_{lim} = 20A
F = 0.0445 for Xg2
CF = 0.993 for Xg2
I_{max} = 40A for Xg2 (Imax = max current rating of Xg2)

$\frac{I_{lim}}{I_{max}} = \frac{20}{36}$ = 55.5% (less than 85%)

Using equation (5)

$I_{trim} = FI_{lim} + CF - 0.53$
$I_{trim} = 1.35V$

Note that application of any voltage >2.5V to I_{trim} will not increase current limit beyond the *powerMods* normal current limit.

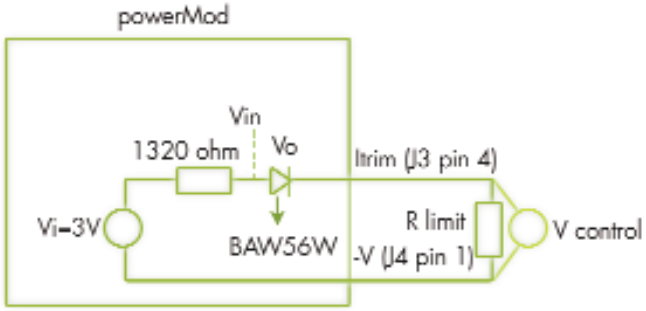

Current Limit Programming

powerMod	F	CF
Xg1	0.0325	0.995
Xg2	0.0445	0.993
Xg3	0.0891	0.969
Xg4	0.1167	0.965
Xg5	0.2888	0.967

Current Limit Adjustment Table

Straight Line Current Limit Using an External Resistor

The formula below will calculate the required external resistor value required to set the current limit of a *powerMod*:

If Current Limit is Less than 85% of Maximum Current:

$$R_{Itrim} = \frac{1320\, I_{trim}}{2.47 - I_{trim}} \qquad (7)$$

If Current Limit is Greater than 85% of Maximum Current:

$$R_{Itrim} = \frac{1320\, I_{trim}}{1.675 - 0.558\, I_{trim}} \qquad (8)$$

Example:
To set the current limit of Xg2 to 20A, what resistance must be placed between the I_{trim} pin and -V.
I_{lim} = 20A
F = 0.0445 for Xg2
CF = 0.993 for Xg2
I_{max} = 40A for Xg2

$\frac{I_{lim}}{I_{max}} = \frac{20}{40}$ = 50% (less than 85%)

Using equation (5)

$I_{trim} = FI_{lim} + CF - 0.53$
$I_{trim} = 1.35V$

Using equation (7)

$$R_{Itrim} \quad \frac{1320 I_{trim}}{2.47 - I_{trim}}$$

R_{Itrim} = 1,591ohms

Foldback Current Limit Programming

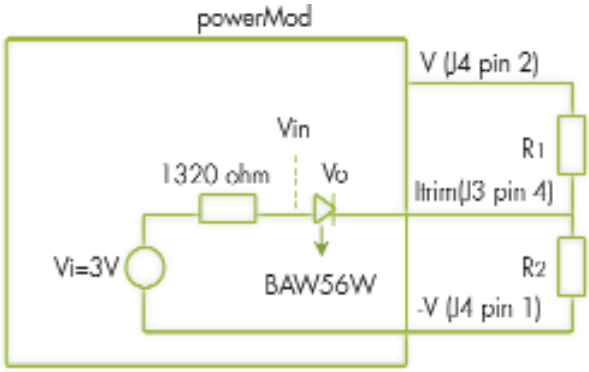

Foldback Current Limit

Foldback Current Limit can be achieved using the circuit below. The onset of Foldback current limit (I_{fb1}) can be programmed using the formula below as can the actual end point (I_{fb2}).
To set the final Foldback current limit point (I_{fb2}), the value R_1 in parallel with R_2 is equivalent to R_{Itrim} in the previous Straight Line current limit example.

To set I_{fb1}, point, we must calculate the ratio of R_1 to R_2.
To get the value of R_1:

$$R1 = \frac{(R_{Itrim})Vout}{[FIf_{b1}(1 + \frac{R_{Itrim}}{1320}) - \frac{2R_{Itrim}}{1320} + 1 - VD]} \qquad (9)$$

$$R2 = \frac{(R1)(R_{Itrim})}{R1 - R_{Itrim}} \qquad (10)$$

VD is the voltage drop across BAW56W. This can be assumed to be 0.53V for most calculations, however it will vary slightly due to temperature. Refer to BAW56W datasheet for further details.

If Current Limit is Less than 85% of Maximum Current:

$$VD = 0.53 \quad (11)$$

If Current Limit is Greater than 85% of Maximum Current:

$$VD = 1.325 - 0.442 I_{trim} \quad (12)$$

Example:
To set the foldback current limit of an Xg2 set at 5V to the following levels, I_{fb1} =30A and I_{fb2}=20A, determine the values of R_1 to R_2 required.

F = 0.0445 for Xg2
CF = 0.993 for Xg2
I_{max} = 40A for Xg2
$\frac{I_{lim}}{I_{max}} = \frac{20}{40}$ = 55.5% (less than 85%)

Using equation (5) $I_{trim} = FI_{lim} = CF - 0.53$

$I_{trim} = 1.35$

Using equation (7) $R_{Itrim} \quad \frac{1320\ I_{trim}}{2.47 - I_{trim}}$

R_{Itrim} = 1,591 ohms

To calculate the ratio of R_1 to R_2 use the formula above

Use equation (11) to get the value of VD

VD = 0.53

Use equation (9) to get the value of R1

$$R1 = \frac{R_{Itrim}\ V_{out}}{FI_{fb1}\left(1 + \frac{R_{Itrim}}{1320}\right) - \frac{2R_{Itrim}}{1320} + 1 - VD}$$

R1 = 7998 ohm

Use equation (10) to get the value of R2

$$R2 = \frac{(R1)(R_{Itrim})}{R1 - R_{Itrim}}$$

R2 = 1998 ohm

Over Voltage Protection (OVP)

Over-voltage protection is implemented on each Xgen *powerMod* output. OVP level is fixed relative to Vmax (110-125%). OVP is Latching and it may be reset by removing and reinstating AC power from the Xgen *powerPac* input.

Power Limit

Each *powerMod* has a number of levels of protection in order to ensure that Xgen is not damaged if used in overload conditions. See graph below.

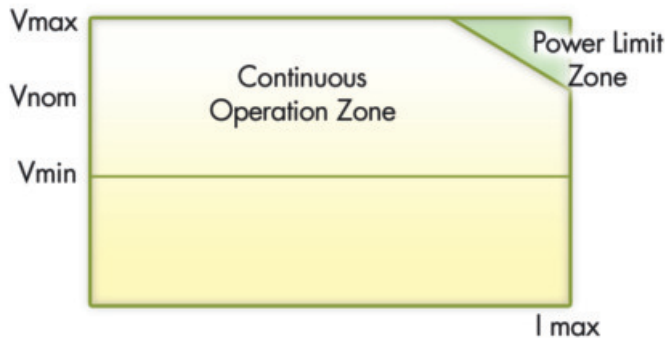

Output powerMod Power Limit

When Vset is less than or equal to Vnom, current limit is employed at the current limit set point. However if Vset is greater than Vnom, the power limit is employed to ensure that the *powerMods* does not exceed its power rating.

e.g. Xg4 is adjustable between 12V and 30V. Imax is 10A. Power rating is 240W.

At 24V the *powerMod* can deliver 10A continuously, i.e 240W. At 30V, the *powerMod* can still deliver 240W, however this equates to 8A continuous.

Remote Sense

To compensate for voltage drops in the output leads, use remote sensing. Remote sensing is available on all single output and on the first output (V1) of the dual output module.

Remote sensing may be implemented by connecting the Positive Sense pin (J3 pin1) to the positive side of the remote load and the Negative Sense pin (J3 pin2) to the negative side of the remote load. The maximum line drop, which can be compensated for by remote sensing, is 0.5V, subject to not exceeding the maximum module voltage at the output terminals.

Observe the following precautions when remote sensing:

1. Use separate twisted pairs for power and sense wiring.
2. Route the sensing leads to prevent pick up, which may appear as ripple on the output.
3. Never disconnect the output power rail with the sensing still connected to the load.

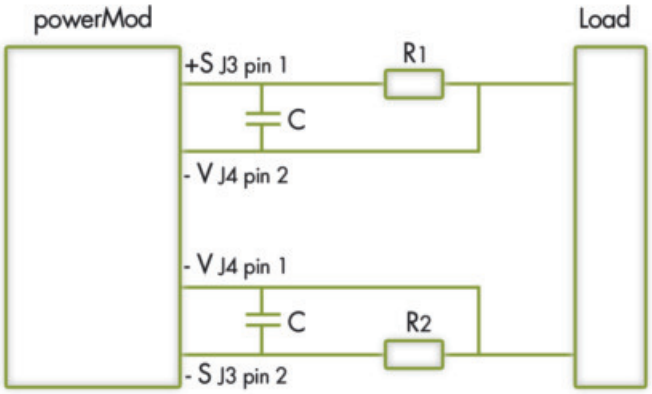

Remote Sense of Output Voltage

In certain applications where there is a high dynamic impedance along the power leads to the sensing point, remote sensing may cause system instability. This system problem can be overcome by using resistors in the sense leads (Positive sense lead: R_1 = 100ohm , Negative sense lead: R_2=10ohm), together with local AC sensing, by using 22uF capacitors between the remote sense pins and the output terminals.
The resistance of the power cables must be so that the voltage drop across the cables is less than 0.5V (to ensure remote sensing operates correctly).

$$R_{cable} < \frac{0.5}{Iout}$$

e.g. for an Xg2, 5V/40A. The R_{cable} must be less than 12.5mohms.

Measurement of Ripple & Noise

As with all switched mode power supplies, it is important to ensure that the correct method is used to verify ripple & noise. Care should be taken to ensure that a loop antenna is not formed by the tip and ground lead of the oscilloscope probe as this would lead to erroneous readings consisting mainly of pickup from remnant radiation in the vicinity of the output connectors. Excelsys recommends the use of a x1 probe with the ground sheath of the probe tip used for ground connection.

In some applications, further erroneous readings may result from CM currents. These can be reduced by looping a few turns of the scope lead through a suitable high permeability ferrite ring.

As most loads powered by a power supply will have at least small values of differential capacitors located near the load, Excelsys also recommends the use of small value of capacitance (approx 1uF) positioned at the point of measurement.

Minimising System Noise

There are a number of causes of poor system noise performance. Some of the more common causes are listed below.

a. Insufficient de-coupling on the PCB or load.

b. Faulty wiring connection or poor cable terminations.

c. Poor system earthing.

There are some simple steps to eliminate, reduce or identify the causes of high frequency noise,

a. Is the noise conducted or radiated? If changing the position of the power supply or screening improves performance, the noise is likely to be radiated. See Section 4.14 EMC (Electro Magnetic Characteristics).

b. Twist all pairs of power and sense cables separately.

c. Ground connections (zero Volt) should be made with the shortest possible wiring via a capacitor to the nearest point on the chassis.

Series Connection of *powerMod* outputs

It is possible to connect modules in series to increase output voltage. Outputs are rated SELV (Safety Extra Low Voltage), that is, that output voltages are guaranteed to be less than 60, volts. Stacking output modules can exceed SELV, the user must take appropriate precautions. Series connected output voltage must not exceed 150VDC.

It is good practice to stack modules with similar output current limits, so that in case of short circuit the outputs collapse together.

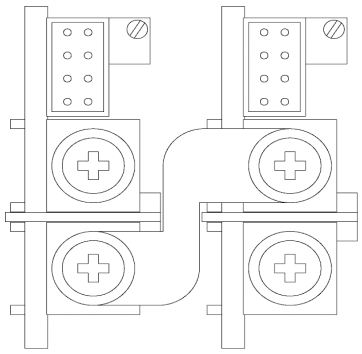

Series Connection of powerMods

If remote sensing is required, the exterior sense connections should connect to the load at point of use, and the interior connections to the local sense. Special links for series connection modules (part number XS1) to reduce wiring complexity can be specified and fitted by the installer or added at the factory.

Parallel Connection of *powerMod* outputs

powerMods may be paralleled to increase output current. Only *powerMods* of the same type may be paralleled and the installer should adjust the setting on each *powerMod* separately to the same value. i.e within 0.1% of the set voltage. Excelsys supplies special parallel link connection bars (part number XP1) for parallel connection to reduce wiring complexity. These can be fitted by the installer or added at the factory.
When connecting *powerMods* in parallel, please observe the following steps.

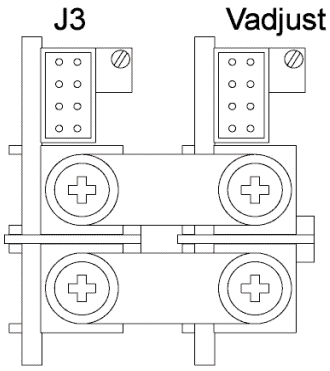

Parallel Connection of powerMods

1. Attach the negative Parallel Link.
2. Ensure *powerMod* DIP switch on each *powerMod* is switched to Ishare ON.
3. Set the voltage of *powerMod* 1 to the correct output required.
4. Measure the voltage difference (dV) between the positive terminals of the p*owerMods* and adjust *powerMod* to minimise dV (typically 5mV).
5. Attach the positive parallel link.

This ensures current sharing between paralleled modules and is the recommended mode for paralleling *powerMods*. Current sharing is proportional to the dV (difference between the voltage settings of the *powerMods*).

The percentage of current sharing is calculated as follows:

$$I_{Share\ error\%} = \frac{10000dV}{1.5V_{max}} \qquad (10)$$

Remote Sense can be implemented as with a single *powerMod*. Simply connect the sense pins of the paralleled *powerMods*. Bring the sense connections from one of the *powerMods* to the load.

For Remote Voltage Adjustment (via Vtrim pin) of *powerMods*, please contact factory.

powerMod Start-Up and Shutdown

powerMods are designed such that when input power is applied, all outputs rise to their set point voltage simultaneously. Likewise, when input power is removed all outputs commence to drop simultaneosly and reach Zero potential simultaneously.

Outputs can be sequenced using the enable function in order to allow controlled start up if required.

See plots for start-up and shutdown characteristics.

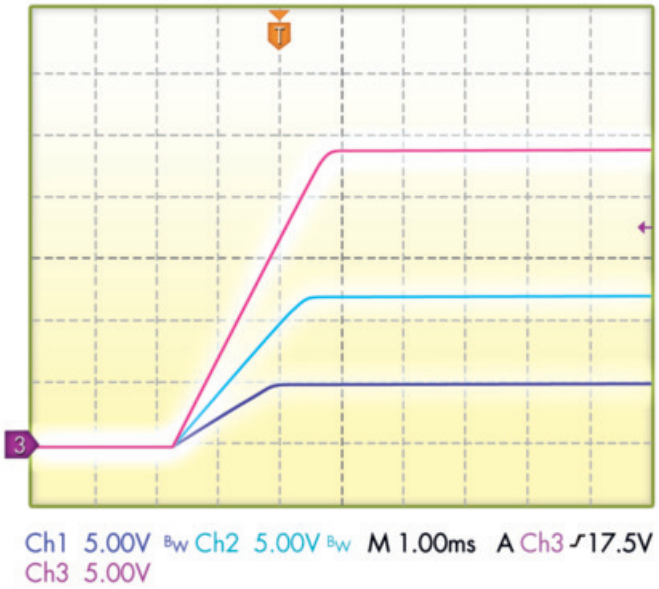

Output powerMod Start-Up

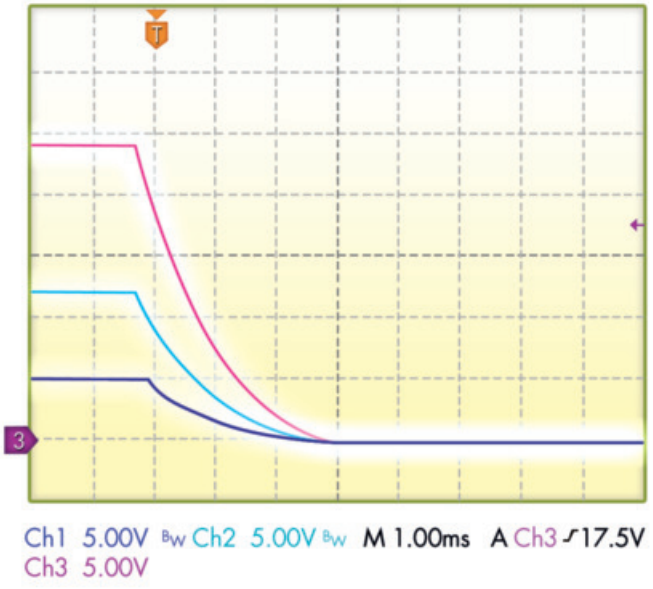

Output powerMod Shutdown

Section 4.7
powerMod Signals

powerMod Enable/Inhibit

Each *powerMod* may be enabled/inhibited by means of an appropriate signal applied to an opto-isolated input on pins J3 pin 5 (positive) and J3 pin 6 (negative), on *powerMods* Xg1 to Xg5. Inhibit is available by means of an appropriate signal applied to an opto-isolated input on J3 pin7 on Xg7, on J3 pin 3 and pin 7 on Xg8. The output voltage of the *powerMod* will be fully inhibited to 0V.

	Xg1 to Xg5	Xg7, Xg8
Maximum signal input voltage	12V	0.8V
Minimum signal input voltage	3V	0V
Minimum current required is	1.7mA	

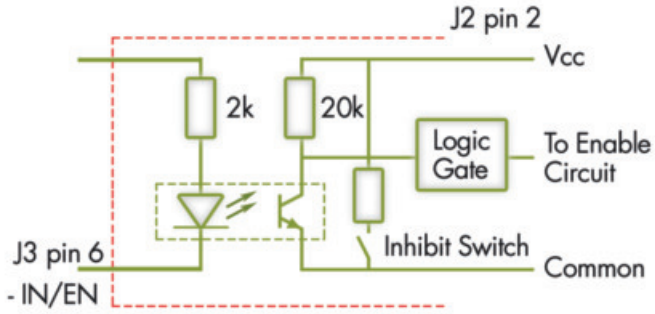

Remote Inhibit/Enable of Output

The *powerMod* can be configured to be NORMALLY ON or NORMALLY OFF by appropriate setting of the DIP switch on the *powerMod.* (note the default mode is NORMALLY ON).

INHIBIT ON/ENABLE OFF is the standard position. The *powerMod* will deliver output voltage when mains is applied (and *powerPac* is enabled). The *powerMod* requires an external signal to disable the output.

E.g. 5V applied between +IN/EN and -IN/EN pins will disable the *powerMod*, (bring output to 0V).

This may be changed to 'ENABLE' by setting of the DIP switch to the INHIBIT OFF/ENABLE ON position.

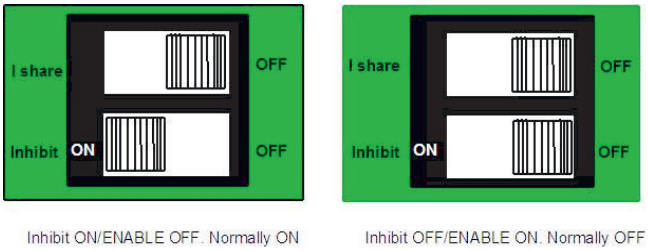

DIP Switch Setting on Output powerMods

DIP switches are only available on *powerMods* Xg1 to Xg5.

powerMod Power Good Signal

Each *powerMod* contains an internal comparator which monitors the output voltage and determines whether this voltage is within normal operation limits. When the output voltage is within normal limits, the Power Good signal is activated.

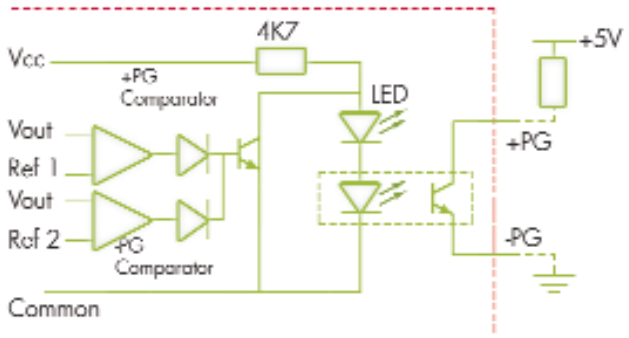

Output powerMods Power Good Signal

For Xg1-Xg5, an opto-isolated signal is generated and available on J3 pin 7 and J3 pin 8. (opto-transistor ON = Good).

For Xg7, signal is available on J3 Pin 6 and J3 Pin5.

For Xg8, V1 signal available on J3 Pin 6 and J3 Pin 5. V2 signal is available on J3 Pin 2 and J3 Pin 1.

Maximum collector current is 2mA.

Maximum Collector voltage is 30V.

T7 < 6ms

T8 < 6ms

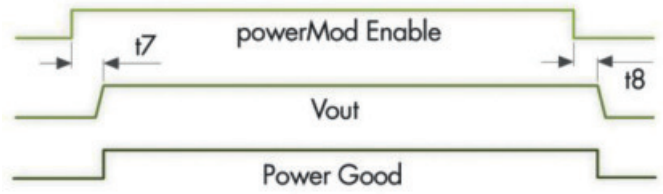

Output powerMod Signals

powerMod LED Indicator

The LED indicator on each *powerMod* module gives a visual indication of the information contained in the Power Good signal above.

Section 4.8

powerPac Operation

The Xgen *powerPac* provides the front end input power to the Xgen *powerMods*. This is available in two package sizes and a number of power ratings. See Section 4.11, Power Ratings for more detail.

Bias Voltage

A SELV isolated bias (always on) voltage of 5V @ 250mA (30mA on XCE and XVE models) is provided on J2 pin 2 relative to J2 pin 1 (common) and may be used for miscellaneous control functions. 5V @ 500mA available on request.

For medical applications, this bias supply voltage has 4000VAC isolation.

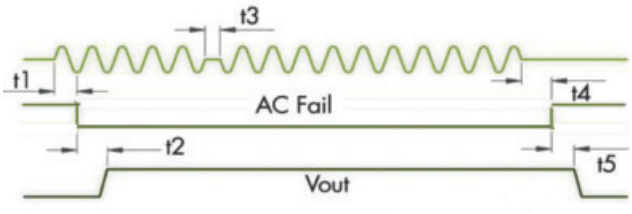

Mains AC Fail Signal

AC Fail

AC Mains Fail signal is implemented by an Opto-isolated signal with a maximum sink current of 4mA. During normal operation the transistor is ON. When the input voltage is lost or goes below 80Vac, the opto-transistor is turned OFF at least 5mS before loss of output regulation (at nominal *powerMod* voltage or below).

80ms < t1 < 600ms

80ms < t2 < 100ms, 400ms for XLD, XMD, XCE and XVE.

t3 = 10ms

t4 > 10ms

t5 > 2ms

Global Inhibit

A global inhibit function may be implemented via simple contact closure as shown. This function inhibits ALL *powerMod* outputs except the auxiliary bias voltage. Global inhibit also shuts down the *powerPac* fans.

Global Enable

A global enable function may be implemented via simple contact closure as shown in the diagram. Ensure that J2 pin 8 and J2 pin 1 are connected prior to contact closure. This function enables ALL *powerMod* outputs and the *powerPac* fans. Refer to the diagram above and product datasheets for Turn-on Delay specifications.

Global Inhibit Using an External Signal

A global inhibit function may be implemented using a signal from the system using the diagram shown.This function inhibits ALL *powerMod* outputs. Global inhibit also shuts down the *powerPac* fans.

Global Enable Using an External Signal

A global enable function may be implemented using a signal from the system using the diagram shown. This function enables ALL *powerMod* outputs.Refer to the diagram above and product datasheets for Turn-on Delay specifications.

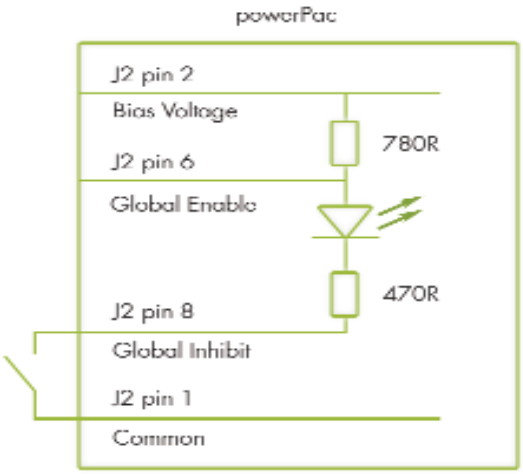

Global Inhibit Using Bias Supply Voltage

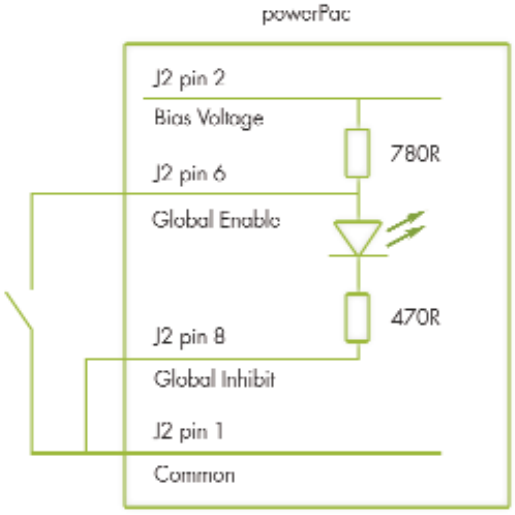

Global Enable Using Bias Supply Voltage

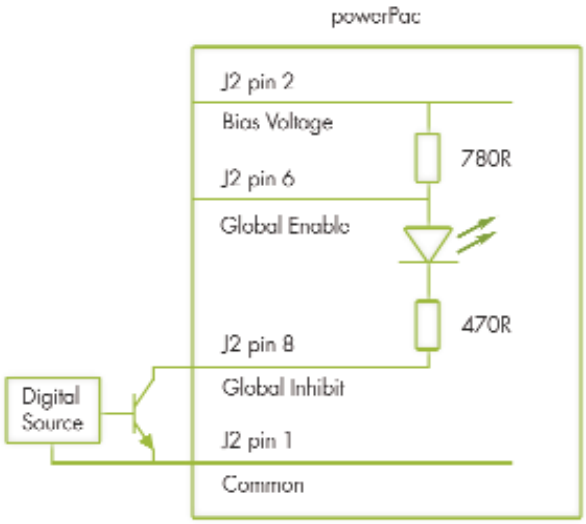

Global Inhibit Using an External Signal

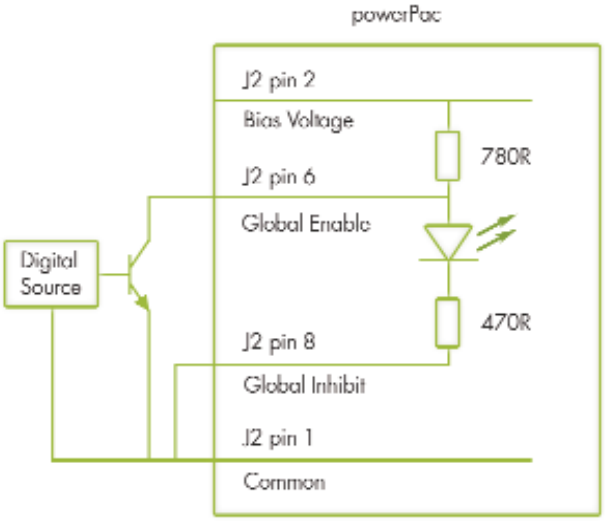

Global Enable Using an External Signal

Section 4.9
powerPac (Global) Signals

AC Fail

AC Mains Fail signal is implemented by an Opto-isolated signal with a maximum sink current of 4mA. During normal operation the transistor is ON. When the input voltage is lost or goes below 80Vac, the opto-transistor is turned OFF at least 5mS before loss of output regulation (at nominal *powerMod* voltage or below).

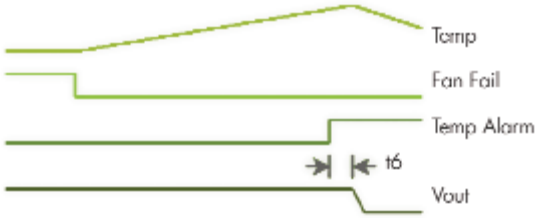

Over-temperature and Fan Fail

80ms < t1 < 600ms

80ms < t2 < 100ms, 400ms for XLD, XMD, XCE and XVE.

t3 = 10ms

t4 > 10ms

t5 > 2ms

Global Inhibit

A global inhibit function may be implemented via simple contact closure as shown. This function inhibits ALL *powerMod* outputs except the auxiliary bias voltage. Global inhibit also shuts down the *powerPac* fans.

Global Enable

A global enable function may be implemented via simple contact closure as shown in the diagram. Ensure that J2 pin 8 and J2 pin 1 are connected prior to contact closure. This function enables ALL *powerMod* outputs and the *powerPac* fans. Refer to the diagram above and product datasheets for Turn-on Delay specifications.

Global Inhibit Using an External Signal

A global inhibit function may be implemented using a signal from the system using the diagram shown.This function inhibits ALL *powerMod* outputs. Global inhibit also shuts down the *powerPac* fans.

Global Enable Using an External Signal

A global enable function may be implemented using a signal from the system using the diagram shown. This function enables ALL *powerMod* outputs.Refer to the diagram above and product datasheets for Turn-on Delay specifications.

Section 4.10
powerPac Options

Temperature Alarm (Option 01)

Open collector signal indicating that excessive temperature has been reached due to fan failure or operation beyond ratings. This signal is activated at least 10ms prior to system shutdown.

Fan Fail (Option 01)

Open collector signal indicating that at least one of the *powerPac* fans has failed. This does not cause power supply shutdown. The power supply will continue to operate until 10ms after the temperature alarm signal is generated.

Reverse Fan (Option 02)

The Xgen series is available with reverse air flow direction. This is ideal to expel air from the system and works particularly well with the internal fan cooling built into the overall system. Contact

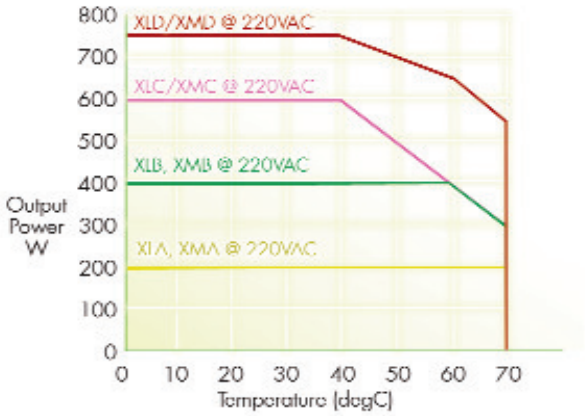

4 slot powerPac Derating Curves

XLA/XLB/XLC/XLD and XMA/XMB/XMC/XMD @ 220VAC Derating

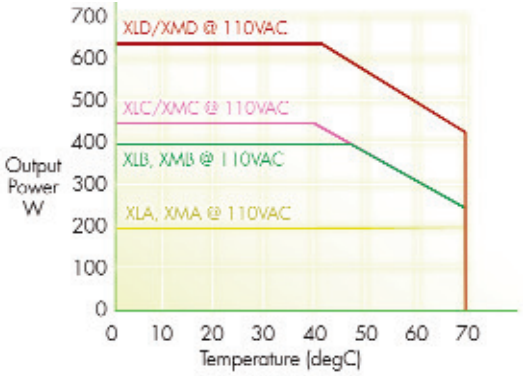

4 slot powerPac Derating Curves

XLA/XLB/XLC/XLD and XMA/XMB/XMC/XMD @ 110VAC Derating

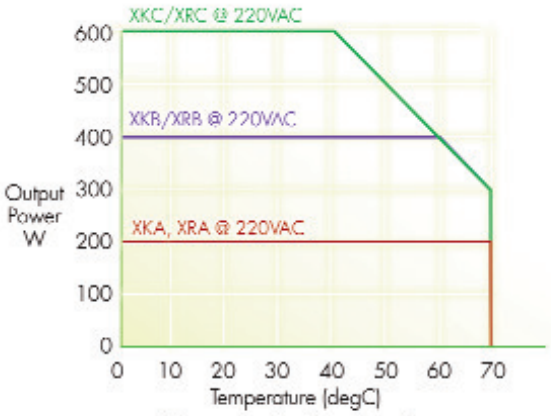

4 slot powerPac Derating Curves

XKA/XKB/XKC and XRA/XRB/XRC @ 220VAC Derating

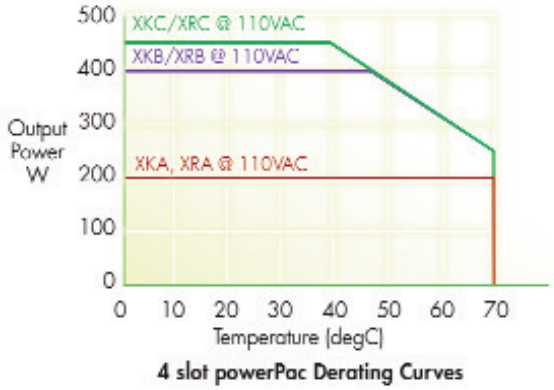

4 slot powerPac Derating Curves

XKA/XKB/XKC and XRA/XRB/XRC @ 110VAC Derating

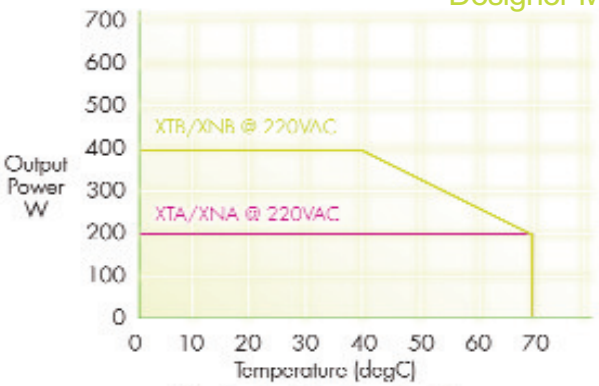

Ultra Quiet 4 slot Derating Curves

XTA/XTB and XNA/XNB @ 220VAC Derating

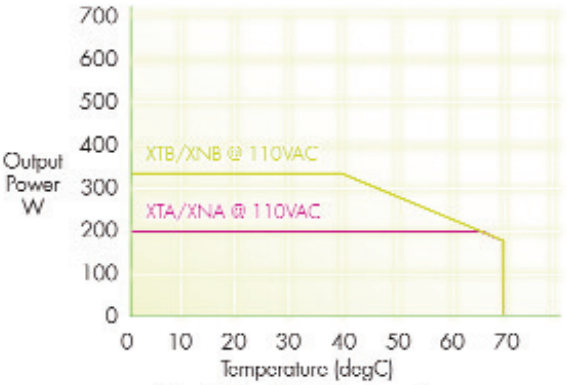

Ultra Quiet 4 slot Derating Curves

XTA/XTB and XNA/XNB @ 110VAC Derating

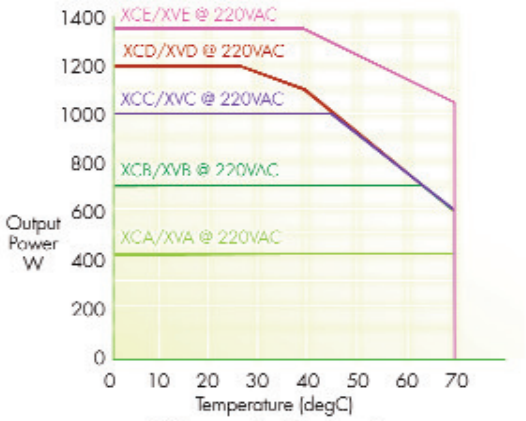

6 slot powerPac Derating Curves

XCA/XCB/XCC/XCD/XCE and XVA/XVB/XVC/XVD/XVE Derating @ 220VAC Derating

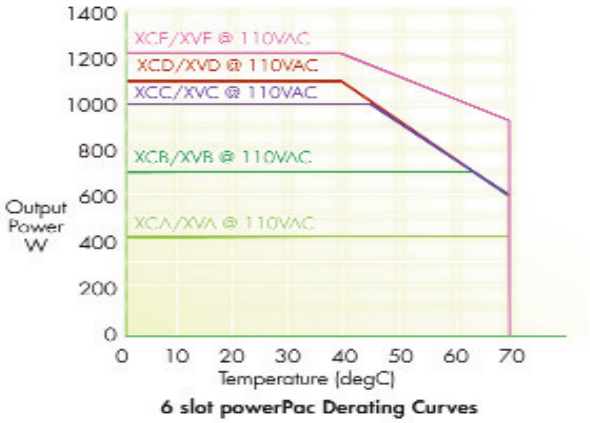

6 slot powerPac Derating Curves

XCA/XCB/XCC/XCD/XCE and XVA/XVB/XVC/XVD/XVE Derating

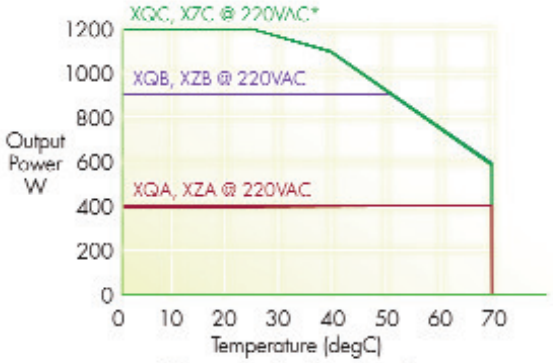

6 slot powerPac Derating Curves

XQA/XQB/XQC and XZA/XZB/XZC @ 220VAC Derating

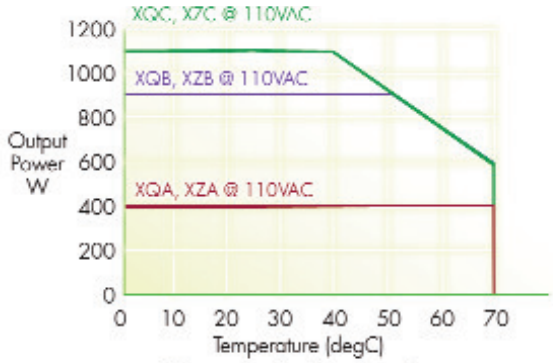

6 slot powerPac Derating Curves

XQA/XQB/XQC and XZA/XZB/XZC @ 110VAC Derating

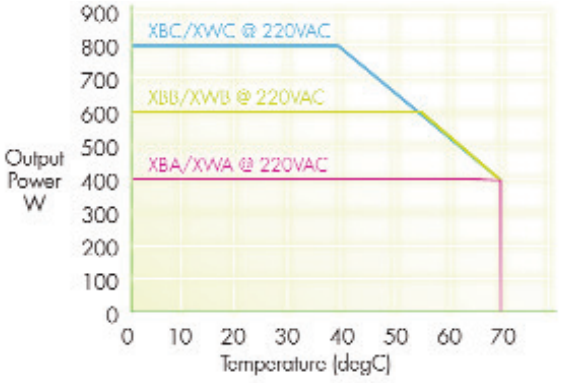

Ultra Quiet 6 slot Derating Curves

XBA/XBB/XBC and XWA/XWB/XWC @ 220VAC Derating

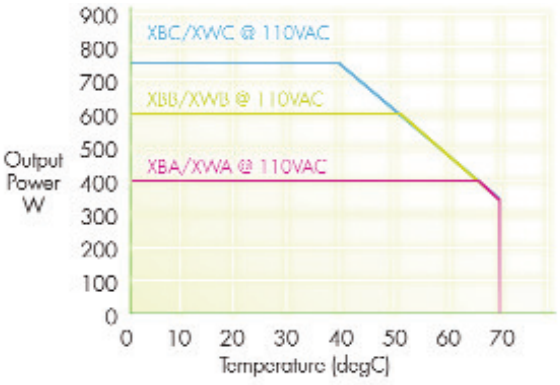

Ultra Quiet 6 slot Derating Curves

XBA/XBB/XBC and XWA/XWB/XWC @ 110VAC Derating

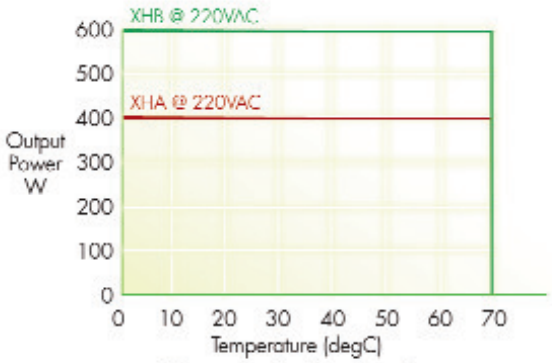

6 slot powerPac Derating Curves

XHA/XHB @ 220VAC Derating

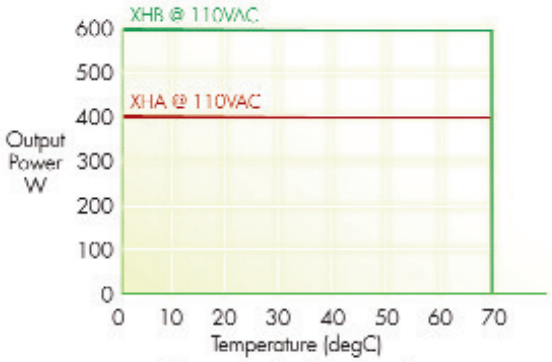

6 slot powerPac Derating Curves

XHA/XHB @ 110VAC Derating

XCE and XVE *powerPac* considerations

1. XCE and XVE can deliver 1450W for a duration of 10s with an 8% duty cycle.
2. When 6 *powerMods* are operated in parallel, the XCE output power must be derated to 1280W.
3. At operation above 40°C, it is necessary to apply minumum load to the outputs. See table for minimum load requirements.

T ambient (°C)	Min Load (W)
40	0
50	100
60	175
70	250

XVC/XVE minimum load requirements

powerMod Derating

All *powerMods* may be used in any *powerPac* slot position. When used in different slot locations, the appropriate temperature derating curve must be observed as set out in the following tables. Derating is independent of Input voltage. Using the following derating curves will ensure that the Xgen is populated with *powerMods* in the best locations to optimise system performance.

	Max Power (W)		
PowerMod	All Models Except XH, XB, XW, XT, XN	Model XH	Models XB, XW, XT, XN
Xg1	125	65	104
Xg2	200	100	166
Xg3	240	120	200
Xg4	240	120	200
Xg5	288	144	240
Xg7	120	60	100
Xg8	72/72	36/36	60/60

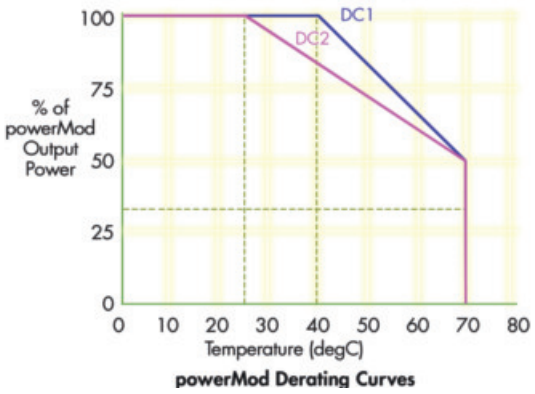

powerMod Derating Curves

powerMod Temperature Derating

Product	Slot	Xg1	Xg2	Xg3	Xg4	Xg5	Xg7	Xg8
4 Slot	A	DC2	DC2	DC2	DC1	DC1	DC1	DC1
	B	DC2*	DC2*	DC2	DC1	DC1	DC1	DC1
	C	DC2	DC2	DC1	DC1	DC1	DC1	DC1
	D	DC1	DC1	DC1	DC1	DC1	DC1	DC1
6 Slot	A	DC1	DC2	DC1	DC1	DC1	DC1	DC1
	B	DC2*	DC2*	DC1	DC1	DC1	DC2	DC2
	C	DC2	DC1	DC1	DC1	DC1	DC1	DC1
	D	DC1	DC1	DC1	DC1	DC1	DC1	DC1
	E	DC1	DC1	DC1	DC1	DC1	DC1	DC1
	F	DC1	DC1	DC1	DC1	DC1	DC1	DC1

* Device can deliver 95% of rated power at 25degC

powerMod Slot Positon Derating

Product	Slot	Xg1	Xg2	Xg3	Xg4	Xg5	Xg7	Xg8
4 Slot	A	DC1	DC2	DC1	DC1	DC1	DC1	DC1
	B	DC2	DC2	DC1	DC1	DC1	DC1	DC1
	C	DC2	DC2	DC1	DC1	DC1	DC1	DC1
	D	DC1	DC2	DC1	DC1	DC1	DC1	DC1
6 Slot	A	DC1	DC2	DC1	DC1	DC1	DC1	DC1
	B	DC2	DC2*	DC1	DC1	DC1	DC1	DC2
	C	DC2	DC2	DC1	DC1	DC1	DC1	DC2
	D	DC2	DC1	DC1	DC1	DC1	DC1	DC1
	E	DC1	DC1	DC1	DC1	DC1	DC1	DC1
	F	DC1	DC1	DC1	DC1	DC1	DC1	DC1

* Device can deliver 95% of rated power at 25degC

powerMod Slot Position Derting for Ultra Quiet XT/XN/XB/XW Series

Acoustic Noise

Xgen power supplies can be used in a wide variety of applications. Certain applications are more sensitive to audible noise than others. The table below sets out the measured acoustic noise of the various versions of Xgen. All acoustic noise measurements have been conducted in an anechoic chamber at a distance of 1m. Please refer to the *powerPac* and *powerMod* derating curves in Section 4.11 when calculating the output power required by the system.

Acoustic Noise measurements of Xgen powerPacs

powerPac	[dBA]	amb [dBA]
Standard XL, XM	45.8	27.4
Quiet Fan XK, XR	39.8	27.5
Ultra Low Noise XT, XN	37.3	27.3
XLD, XMD	52.8	27.3

powerPac	[dBA]	amb [dBA]
Standard XC, XV	49.5	27.3
Quiet Fan XQ, XZ	42.7	27.5
Ultra Low Noise XB, XW	38.3	27.4
XCE, XVE	56.5	27.3

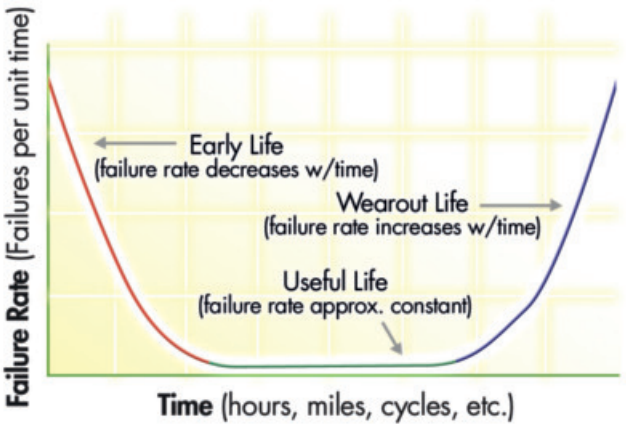

Bathtub Reliability curve

Section 4.12

Reliability

The 'bath-tub' curve shows how the failure rate of a power supply develops over time. It is made up of three separate stages. Immediately after production, some units fail due to defective components or production errors. To ensure that these early failures do not happen while in the possession of the user, Excelsys carries out a burn-in on each unit, designed to ensure that all these early failures are detected at Excelsys. After this period, the power supplies fail very rarely, and the failure rate during this period is fairly constant. The reciprocal of this failure rate is the MTBF (Mean Time Between Failures).

At some time, as the unit approaches its end of life, the first signs of wear appear and failures become more frequent. Generally 'lifetime' is defined as that time where the failure rate increases to five times the statistical rate from the flat portion of the curve.

In summary, the MTBF is a measurement of how many devices fail in a period of time (i.e. a measure of reliability), before signs of wear set in. On the other hand, the lifetime is the time after which the units fail due to wear appearing.

The MTBF may be calculated mathematically as follows:

MTBF = Total x t / Failure , where

Total is the total number of power supplies operated simultaneously.

Failure is the number of failures.

t is the observation period.

MTBF may be established in two ways, by actual statistics on the hours of operation of a large population of units, or by calculation from a known standard such as Telecordia SR-332 and MIL-HDBK-217 and its revisions.

Determining MTBF by Calculation

MTBF, when calculated in accordance with Telecordia, MIL-HDBK-217 and other reliability tables involves the summation of the failure rates of each individual component at its operating temperature.

The failure rate of each component is determined by multiplying a base failure rate for that component by its operating stress level.

The result is FPMH, the failure rate per million operating hours for that component.

Then FPMH for an assembly is simply the sum of the individual component FPMH.

Total FPMH = FPMH1 + FPMH2 + …….. +FPMHn

$$\text{MTBF (hours)} = \frac{1{,}000{,}000}{\text{FPMH}}$$

In this manner, MTBF can be calculated at any temperature. The Xgen series has the following failure rates at 40°C and full load, based on Telecordia SR-332 standard.

powerMod 0.958 failures per million hours
4slot *powerPac* 0.92 failures per million hours
6slot *powerPac* 0.946 failures per million hours

The figures for the *powerPac* excludes fans.

Example:
What is the MTBF of XLB4400-00
XLB FPMH = 0.92
Xg4 FPMH = 0.958
Total FPMH = 2.88
MTBF = 347,000 hours at 40°C

MTBF and Temperature

Reliability and MTBF are highly dependent on operating temperature. The figures above are given at 40°C. For each 10°C decrease, the MTBF increases by a factor of approximately 2. Conversely, however, for each 10°C increase, the MTBF reduces by a similar factor. Therefore, when comparing manufacturer's quoted MTBF figures, look at the temperature information provided.

Section 4.13
Safety Approvals

Low Voltage Directive (LVD) 2006/95/EC

The LVD applies to equipment with an AC input voltage of between 50V and 1000V or a DC input voltage between 75V and 1500V. The Xgen series is CE marked to show compliance with the LVD.

The relevant European standard for XC, XL, XH, XK, XT, XB and XQ models is EN60950 (Information technology). The 2nd Edition of this standard in now published and all relevant Excelsys power supplies are certified to the latest edition as well as the 1st Edition.

The relevant European standard for XV, XM, XR, XZ, XN and XW medical models is EN60601-1 (Medical Devices Directive). The 3rd Edition of this standard is published and all Excelsys medically approved power supplies are certified to this latest edition as well as the 2nd Edition. With appropriate packaging, the Xgen can also meet the requirements of EN61010-1 for industrial scientific measuring equipment and process control.

XC, XL, XH, XK, XT, XB and XQ models are certified to comply with the requirements of IEC950, EN60950, UL60950 (1st and 2nd Editions), and CSA 22.2 no. 234 and IEC1010, when correctly installed in a imited access environment.

The XV, XM, XR, XZ, XN and XW models are certified to comply with the requirements of IEC601-1, EN60601-1, UL60601-1 (2nd and 3rd Editions) and CSA601-1, for non-patient connect applications.
powerMods Xg2, Xg3, Xg4 and Xg5 are capable of providing hazardous energy levels (>240 VA). Equipment manufacturers must provide adequate protection to service personnel.

Environmental Parameters

The Xgen series is designed for the following parameters:
Material Group IIIb, Pollution Degree 2
Installation Category 2
Class I
Indoor use (installed, accessible to Service Engineers only).
Altitude: -155 metres to +2000 metres from sea level.
Humidity: 5 to 95% non-condensing.
Operating temperature -20°C to 70°C
Derate to 70°C. See *powerPac* Derating for details.

Approval Limitations

Use in North America

When this product is used on 180 to 253 Volts AC mains with no neutral, connect the two live wires to L (live) and N (neutral) terminals on the input connector.

Standard

Creepage Distances — XC, XL, XH, XK, XQ, XT, XB models
Primary mains circuits to earth: 2.5mm spacing
Primary mains circuits to secondary: 5mm spacing

Dielectric strength — XC, XL, XH, XK, XQ, XT, XB models
Primary mains circuits to chassis: 1500VAC
Primary mains circuits to secondary: 3000VAC

Medical

Creepage Distances — XV, XM, XR, XZ, XN, XW models
Primary mains circuits to earth: 4mm spacing
Primary mains circuits to secondary: 8mm spacing

Dielectric strength — XV, XM, XR, XZ, XN, XW models
Primary mains circuits to chassis: 1500VAC
Primary mains circuits to secondary: 4000VAC

The primary to secondary test is not possible with modules fitted to the unit, as damage to the EMI capacitors will occur.

Output Isolation

Outputs are each isolated 500V DC to each other and 500 V DC to chassis.

Section 4.14
Electro Magnetic Characteristics

EMC Directive 2004/108/EC

Component Power Supplies such as the Xgen series are not covered by the EMC directive. It is not possible for any power supply manufacturer to guarantee conformity of the final product to the EMC directive, since performance is critically dependent on the final system configuration. System compliance with the EMC directive is facilitated by Xgen compliance with several of the requirements as outlined in the following paragraphs. Although the Xgen product series meet these requirements, the CE mark does not cover this area.

EMISSIONS

Power Factor (Harmonic) Correction

The Xgen series incorporates active power factor correction and therefore meets the requirements of EN61000-3-2. Power factor: 0.98

EN61000-3-3 Flicker & Voltage Fluctuation Limits
Xgen power supplies meet the requirements of the limits on voltage fluctuations and flicker in low voltage supply systems.

EN55022 Class B Conducted Emissions
Under appropriate test conditions, the Xgen series meets the requirements of EN55022 Class B, without the need for external filtering.

IMMUNITY

The Xgen series has been designed to meet, and tested to, the immunity specifications outlined below:

EN61000-4-2 Electrostatic Discharge Immunity
8kV Air discharge applied to Enclosure
6kV Contact with Enclosure

EN61000-4-3 Radiated Electromagnetic Field
10Volts/metre 80MHz to 2.5GHz applied to Enclosure

EN61000-4-4 Fast Transients-Burst Immunity
+/-2kV

EN61000-4-5 Input Surge Immunity
+/-2kV Common Mode 1.2/50 S (Voltage); 8/20uS (Current)
+/- 1kV Differential Mode 1.2/50 S (Voltage) 8/20 S (Current)

EN61000-4-6 Conducted Immunity
10 V/m 150KHz to 80MHz

EN61000-4-11 Voltage Dips

0%	1s	Criteria B
40%	100ms	Criteria B
70%	10ms	Criteria A

Further details on all tests are available from Excelsys.

Guidelines for Optimum EMC Performance

The Xgen series is designed to comply with European Normative limits (EN) for conducted and radiated emissions and immunity when correctly installed in a system. See performance levels attained above. However, power supply compliance with these limits is not a guarantee of system compliance. System EMC performance can be impacted by a number and combination items. Design consideration such as PCB layout and tracking, cabling arrangements and orientation of the power supply amongst others all directly contribute to the EMC performance of a system.

Cabling arrangements and PCB tracking layouts are the greatest contributing factors to system EMC performance. It is important that PCB tracks and power cables are arranged to minimise current carrying loops that can radiate, and to minimise loops that could have noise currents induced into them. All cables and PCB tracks should be treated as radiation sources and antenna and every effort should be made to minimise their interaction

a. Keep all cable lengths as short as possible.
b. Minimise the area of power carrying loops to minimise radiation, by using twisted pairs of power cables with the maximum twist possible.
c. Run PCB power tracks back to back.
d. Minimise noise current induced in signal carrying lines, by twisted pairs for sense cables with the maximum twist possible.
e. Do not combine power and sense cables in the same harness
f. Ensure good system grounding. System Earth should be a “starpoint”. Input earth of the equipment should be directed to the “starpoint” as soon as possible. The power supply earth should be connected directly to the “starpoint”. All other earths should go to the ‘starpoint”.

TECHNICAL RESOURCES

CONSULT AN ENGINEER

Our experienced applications engineering team are ready to provide design consultancy support including product recommendations to deliver optimal systems performance, and most importantly reduced time to market. We are committed to providing you with the highest performing, most reliable power solution ensuring the lowest total cost of ownership for you.

To contact one of our team please e-mail support@excelsys.com or telephone:

North America and Canada: +1 972 771 4544

Europe and Asia: +353 21 4354716

ONLINE RESOURCES

Our website www.excelsys.com hosts a wide range of easily accessible resources to support your power supply decision making. This includes:

- **Application Notes:** Supporting system designers in the integration of the Excelsys power supplies into their system.
- **Safety and Environmental Certification:** All our power supplies carry full international safety agency approvals including UL and EN for information technology and medical power supplies. To ease the system safety approvals we have provided our UL and CB certificates and we have also included our declarations of conformity. All Excelsys power supplies are REACH and RoHS compliant. Visit our Safety and Environmental section online where you can download our UL and CB safety certifications, and declarations of conformity to simplify system compliance.
- **EMI Characterisation:** Excelsys power supplies are component power supplies and as such are not subject to the EMC directive for EMI, however in order to ease system integration, Excelsys Technlogies has carried out extensive EMI characterization of our products against the relevant standards.
- **HALT (Highly Accelerated Life Testing):** Poor reliability, low MTBF, frequent field returns, high in-warranty costs and customer dissatisfaction are often the result of design and/or process weaknesses, even if a product has successfully passed qualification tests and burn-in. Excelsys Technologies subjects all our products to the HALT (Highly Accelerated Life Testing) process to uncover design and/or process weaknesses. During the HALT process, the product is subjected to progressively higher stress levels brought on by thermal dwells, vibration, rapid temperature transitions and combined environments.
- **White Papers**: Excelsys team of experienced power supply designers have an extensive knowledge of power supplies, technology and the challenges facing system designers. In conjunction with the Xgen Designers' Manual, and Application Notes, we also prepare White Papers on topics that are relevant to system designers.
- **Designers' Manual:** The Xgen Designers' Manual has been prepared to assist engineers and technicians in understanding correct design practices necessary to achieve the maximum versatility and performance from any of the Xgen family of products. Whatever your application, be it industrial electronics, medical equipment, automation equipment etc., the Xgen Designers' Manual provides the system designer with easy to implement integration instructions. The Designers' Manual is available in Section 4 of this catalogue or you can download it from the Excelsys website.
- **Datasheets:** There is an Xgen for every application. All data sheets can be viewed in Section 2 of this catalogue or downloaded online.

Design your own Power Supply

with our Xgen Configurator

Whatever your power supply needs, Excelsys has a solution for you! Design you power supply using our Online Configurator. Simply input your volts and amps requirements, and we will do the rest. The Online Configurator will configure a power supply to meet your exact power requirements and it's available to ship immediately from our stocking distributors or can be ordered from our Online Shop.

MEDICAL

Xgen Product Selector

The Xgen series of user configurable power supplies with its unique plug and play architecture allows system designers to define and build 'instant' custom power solutions with industry leading 17W/in^3 power density and up to 90% efficiency.

Xgen *powerPacs*

The application specific 4 slot and 6 slot *powerPacs* provide up to 12 isolated DC outputs from 200W up to 1340W. The table below summarises the *powerPacs* by application and power level. Please refer to the specific product datasheets for full specifications.

Application	Slots	200W	400W	600W	700W	750W	800W	900W	1000W	1200W	1340W
Standard	4 Slot	XLA	XLB	XLC		XLD					
	6 Slot		XCA		XCB				XCC	XCD	XCE
Medical	4 Slot	XMA	XMB	XMC		XMD					
	6 Slot		XVA		XVB				XVC	XVD	XVE
Low Noise Standard	4 Slot	XKA	XKB	XKC							
	6 Slot		XQA					XQB		XQC	
Low Noise Medical	4 Slot	XRA	XRB	XRC							
	6 Slot		XZA					XZB		XZC	
Ultra Quiet Standard	4 Slot	XTA	XTB								
	6 Slot		XBA	XBB			XBC				
Ultra Quiet Medical	4 Slot	XNA	XNB								
	6 Slot		XWA	XWB			XWC				
Hi-Temp	6 Slot		XHA	XHB							

Xgen *powerMods*

High Efficiency Plug and Play DC output modules to provide a wide range of DC output voltages from 1.0V up to 58.0V

MODEL	Vmin		Vnom	Vmax	Imax	Watts
	Vtrim	Vpot				
Xg1	1.0	1.5	2.5	3.6	50A	125W
Xg2	1.5	3.2	5.0	6.0	40A	200W
Xg3	4.0	6.0	12.0	15.0	20A	240W
Xg4	8.0	12.0	24.0	30.0	10A	240W
Xg5	8.0	24.0	48.0	58.0	6A	288W
Xg7		5.0	24.0	28.0	5A	120W
Xg8 V1		5.0	24.0	28.0	3A	72W
V2		5.0	24.0	28.0	3A	72W

Standard Xgen product options include: Conformal Coating, Low Acoustic Noise, Low Leakage Current, Extra Ruggedisation, Connector, Cabling & Mounting options, Thermal Signals and Reverse Fans. See Section 4.10 for more information.

TECHNICAL RESOURCES

- **Application Notes:** Supporting system ers in the integration of the s power supplies into their system. pport functions include:
- **and Environmental Certification:** r power supplies carry full tional safety agency approvals g, UL and EN for information ogy and medical power supplies n. To ease the system safety approvals we have provided our UL and CB certificates and we have also included our declarations of conformity. Visit our Safety and Environmental section online where you can download our UL and CB safety certifications, and declarations of conformity to simplify system compliance.
- **EMI Charactisation:** Excelsys power supplies are component power supplies, and as such are not subject to the EMC directive for EMI, however in order to ease system integration, Excelsys Technlogies has carried out extensive EMI characterization of our products against the relevant standards.
- **HALT (Highly Accelerated Life Testing):** Poor reliability, low MTBF, frequent field returns, high in-warranty costs, and customer dissatisfaction are often the result of d if a qua Technologies subjects all our products to the HALT (Highly Accelerated Life Testing) process to uncover design and/or process weaknesses. During the HALT process, the product is subjected to progressively higher stress levels brought on by thermal dwells, vibration, rapid temperature transitions and combined environments. These stimuli are well beyond the expected operating field environments

Consult an Engineer
www.excelsys.com/technical-support/consult-an-engineer

Xgen Product Selector

The Xgen series of user configurable power supplies is the most flexible power supply in the world input front-ends (powerPacs) with slide-in output DC output modules (powerMods) you can create supply. The plug and play architecture allows system designers to define and build 'instant' custon leading 17W/in3 power density and up to 90% efficiency.

Xgen *powerPacs*

The application specific 4 slot and 6 slot powerpacs provide up to 12 isolated DC outputs from 200 summarises the powerPacs by application and power level. Please refer to the specific product dat

Application	Slots	200W	400W	600W	700W	750W	800W	900W
Standard	4 Slot	XLA	XLB	XLC		XLD		
	6 Slot		XCA		XCB			
Medical	4 Slot	XMA	XMB	XMC		XMD		
	6 Slot		XVA		XVB			
Low Noise Standard	4 Slot	XKA	XKB	XKC				
	6 Slot			XQA				XQB
Low Noise Medical	4 Slot	XRA	XRB	XRC				
	6 Slot			ZXA				XZB
Ultra Quiet Standard	4 Slot	XTA	XTB					
	6 Slot		XBA	XBB			XBC	
Ultra Quiet Medical	4 Slot	XNA	XNB					
	6 Slot		XWA	XWB			XWC	
Hi-Temp	6 Slot		XHA	XHB				

Xgen *powerMods*

High Efficiency Plug and Play DC output modules to provide a wide range of DC output voltages fo

MODEL		Vmin	Vnom	Vmax	Imax	Imin	Type	Watts
Xg1		1.0	2.5	3.6	50A	0A	A	125W
Xg2		1.5	5.0	6.0	40A	0A	A	200W
Xg3		4.0	12.0	15.0	20A	0A	A	240W
Xg4		8.0	24.0	30.0	10A	0A	A	240W
Xg5		8.0	48.0	58.0	6A	0A	A	288W
Xg7		5.0	24.0	30.0	5A	0A	A	120W
Xg8	*V1*	5.0	24.0	28.0	3A	0A	B	72W
	V2	5.0	24.0	28.0	3A	0A		72W

Excelsys Technologies Ltd.

Standard Xgen product options include:Conformal Coating, Low Acoustic noise, Low Leakage Connector, Cabling & Mounting options, Thermal Signals and Reverse Fans. See section 4.10 for n

MODEL		Vmin	Vnom	Vmax	Imax	Imin	Type	Watts
Xg1		1.0	2.5	3.6	50A	0A	A	125W
Xg2		1.5	5.0	6.0	40A	0A	A	200W
Xg3		4.0	12.0	15.0	20A	0A	A	240W
Xg4		8.0	24.0	30.0	10A	0A	A	240W
Xg5		8.0	48.0	58.0	6A	0A	A	288W
Xg7		5.0	24.0	30.0	5A	0A	A	120W
Xg8	*V1*	5.0	24.0	28.0	3A	0A	B	72W
	V2	5.0	24.0	28.0	3A	0A		72W

Excelsys Technologies
519 Interstate 30, #309
Rockwall
TX 75087
USA

t: +1 972 771 4544
f: +1 972 421 1805